STANDARD TORQUE DATA FOR HYDRAULIC TUBES AND FITTINGS

TUBE NUTS FOR 37° FLARED FITTINGS								O-RING BOSS PLUGS, ADJUSTABLE FITTING LOCK NUTS, SWIVEL JIC – 37° SEATS			
SIZE	TUBING O.D.		THREAD SIZE	TORQUE				TORQUE			
				FOOT POUNDS		NEWTON METERS		FOOT POUNDS		NEWTON METERS	
	Inches	mm		Min.	Max.	Min.	Max.	Min.	Max.	Min.	Max.
4	1/4	6.4	7/16-20	9	12	12	16	6	10	8	14
5	5/16	7.9	1/2-20	12	15	16	20	10	15	14	20
6	3/8	9.5	9/16-18	21	24	29	33	15	20	20	27
8	1/2	12.7	3/4-16	35	40	47	54	25	30	34	41
10	5/8	15.9	7/8-14	53	58	72	79	35	40	47	54
12	3/4	19.1	1-1/16-12	77	82	104	111	60	70	81	95
14	7/8	22.2	1-3/16-12	90	100	122	136	70	80	95	109
16	1	25.4	1-5/16-12	110	120	149	163	80	90	108	122
20	1-1/4	31.8	1-5/8-12	140	150	190	204	95	115	129	156
24	1-1/2	38.1	1-7/8-12	160	175	217	237	120	140	163	190
32	2	50.8	2-1/2-12	225	240	305	325	250	300	339	407

Above torque figures are recommended for plain, cadmium or zinc plated fittings, dry or wet installations.

Swivel nuts either swaged or brazed.

These torques are not recommended for tubes of 1/2" (12.7 mm) O.D. and larger with wall thickness of .035" (.889 mm) or less. The torque is specified for .035" (.889 mm) wall tubes on each application individually.

INSTRUCTIONS FOR THE ADJUSTABLE STANDARD THREAD TUBE FITTINGS

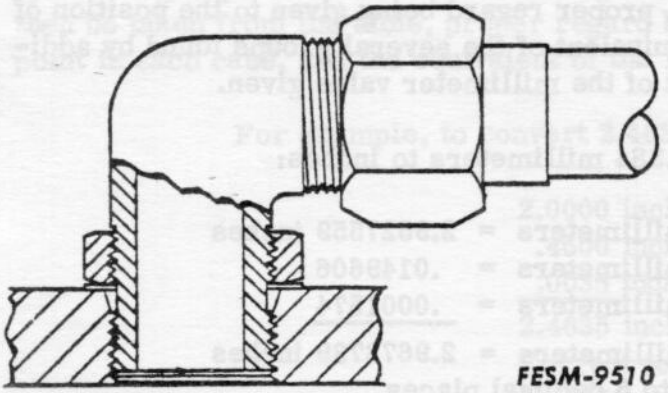

FESM-9510

The following general instructions will apply to the adjustable straight threaded hydraulic O-ring boss tube fitting of the 37° style shown.

Blue Ribbon Service

Service Manual

INTERNATIONAL®
CUB CADET® TRACTORS
Models 86, 108, 109, 128, 129, 149, 169
800, 1000, 1200, 1250, 1450 & 1650
Chassis & IH Equipment

GSS-1464 W/Revision 2
September, 1979

INTERNATIONAL HARVESTER
NORTH AMERICA OPERATIONS
AGRICULTURAL EQUIPMENT GROUP
401 NORTH MICHIGAN AVENUE • CHICAGO, ILLINOIS, 60611, U.S.A.

Due to a continuous program of research and development, some procedures, specifications and parts may be altered in a constant effort to improve our products.

When changes and improvements are made in our products, periodic revisions may be made to this manual to keep it up-to-date. It is suggested that customers contact their dealer for information on the latest revision.

3-2

INTERNATIONAL®
CUB CADET® TRACTORS
Models 86, 108, 109, 128, 129, 149, 169
800, 1000, 1200, 1250, 1450 & 1650
Chassis & IH Equipment

GSS-1464 W/Revision 2
September, 1979

Refer to GSS-1465—Engine, Fuel and Electrical System (Kohler Engine) for service information not contained in this manual.

Section 1

ENGINE

CONTENTS

ENGINE

Models 86, 108, 109, 128, 129, 149 and 169

Removal

1. Disconnect the battery ground cable.

2. Remove the fuel tank and panel extensions as an assembly.

3. Disconnect the wire harness from the coil and motor-generator.

4. Remove the motor-generator.

5. Disconnect and remove the PTO linkage.

6. Remove the motor-generator belt.

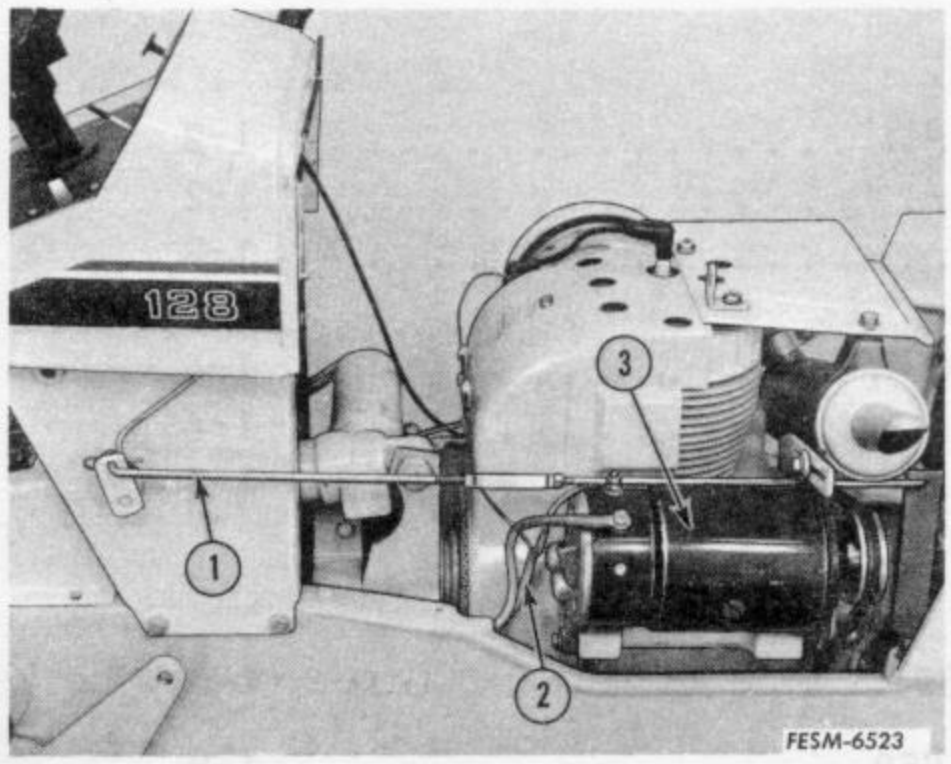

1. PTO linkage
2. Wire harness
3. Motor-generator

7. Disconnect the choke and throttle cables.

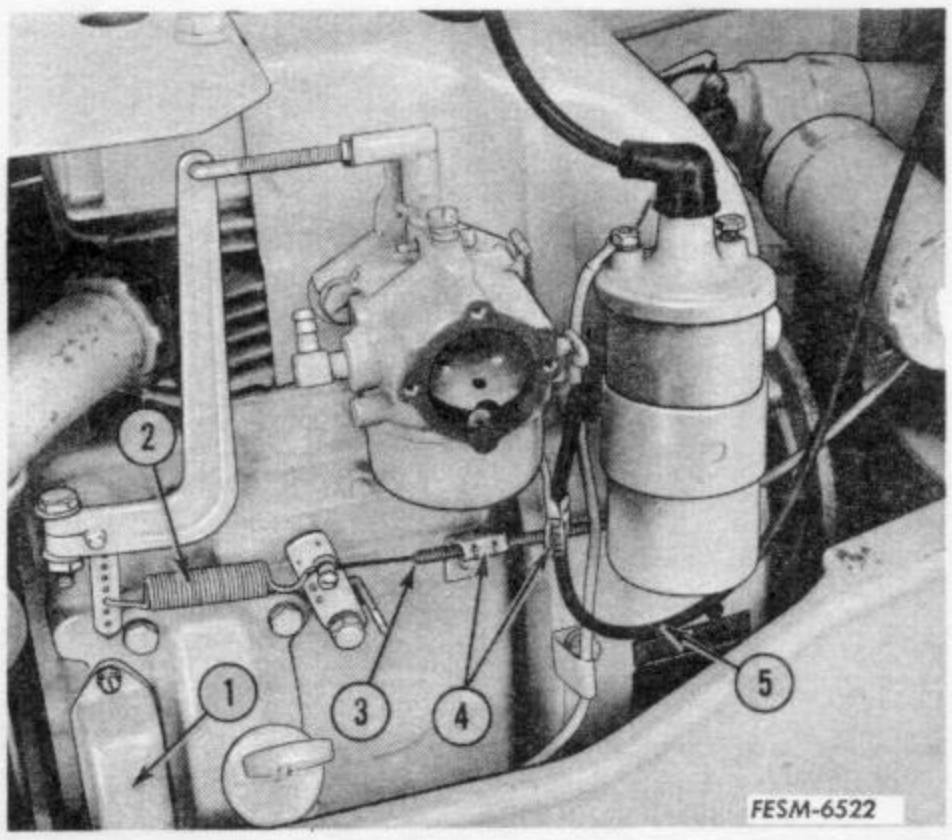

1. Breaker point cover
2. Governor spring
3. Throttle cable
4. Mounting clip
5. Choke cable

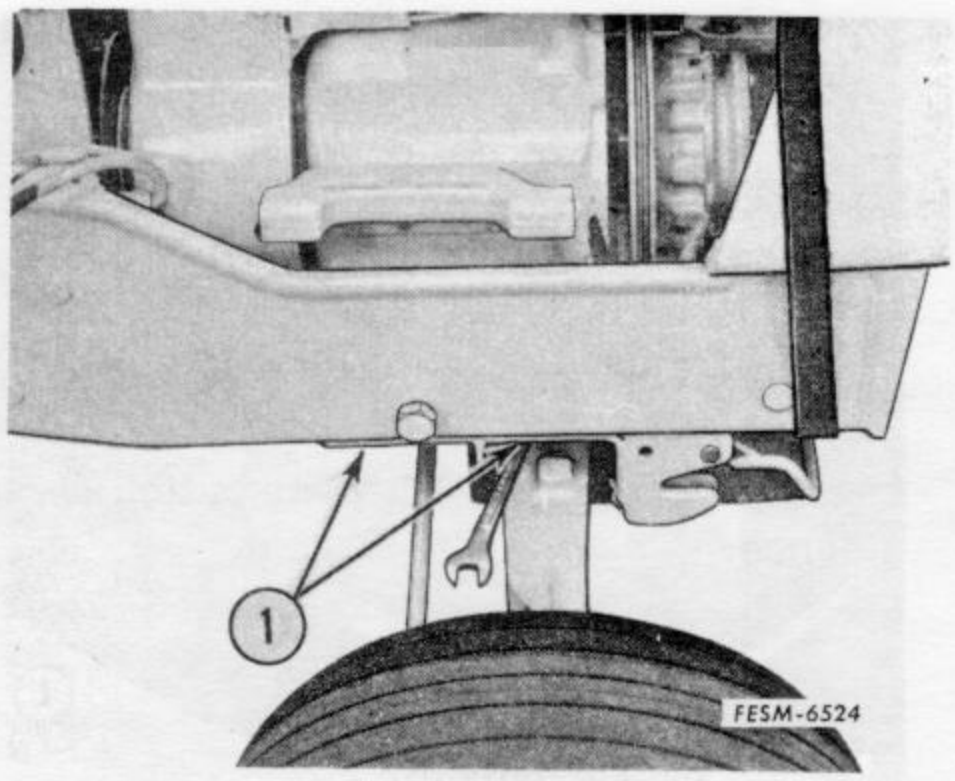

1. Engine mount bolts

8. Remove the engine mounting bolts. The front of the tractor will have to be raised to remove the front bolts.

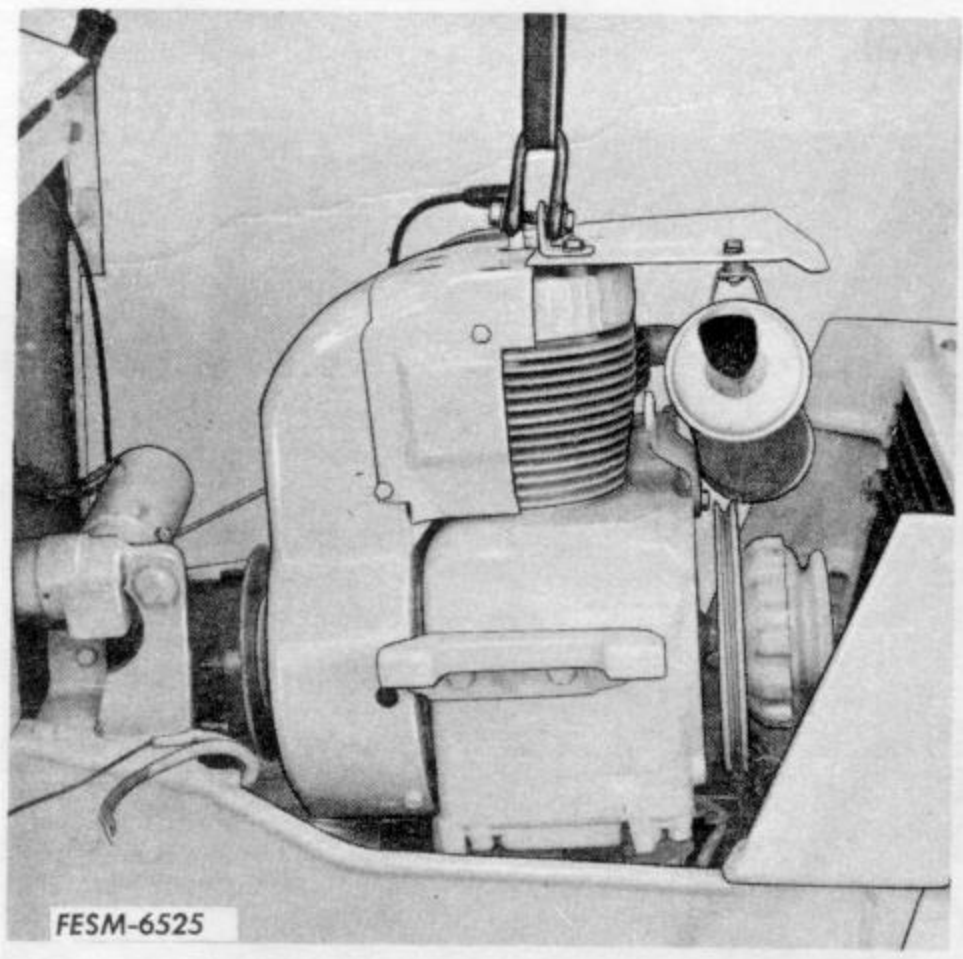

9. Slide the engine forward and lift it out.

NOTE: For specifications and overhaul procedures, refer to Blue Ribbon Service Manual GSS-1465. This manual covers the engine, fuel system, cranking motor and generating system components.

Installation

1. Install the engine by reversing the removal procedure.

2. Check the engine oil level. Fill to proper level. Refer to operators manual for recommended oil.

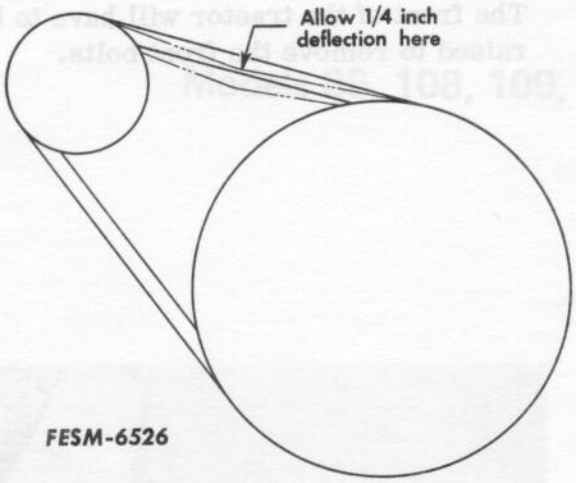

3. Adjust the motor-generator belt tension. The tension is correct when the belt can be deflected a maximum of 1/4-inch by a ten pound force applied midway between the two pulleys.

4. Adjust the following as necessary:

a. Front PTO wear button clearance.

b. Governor linkage.

c. Carburetor.

d. Ignition timing.

Models 800, 1000, 1200, 1250, 1450 and 1650

Removal

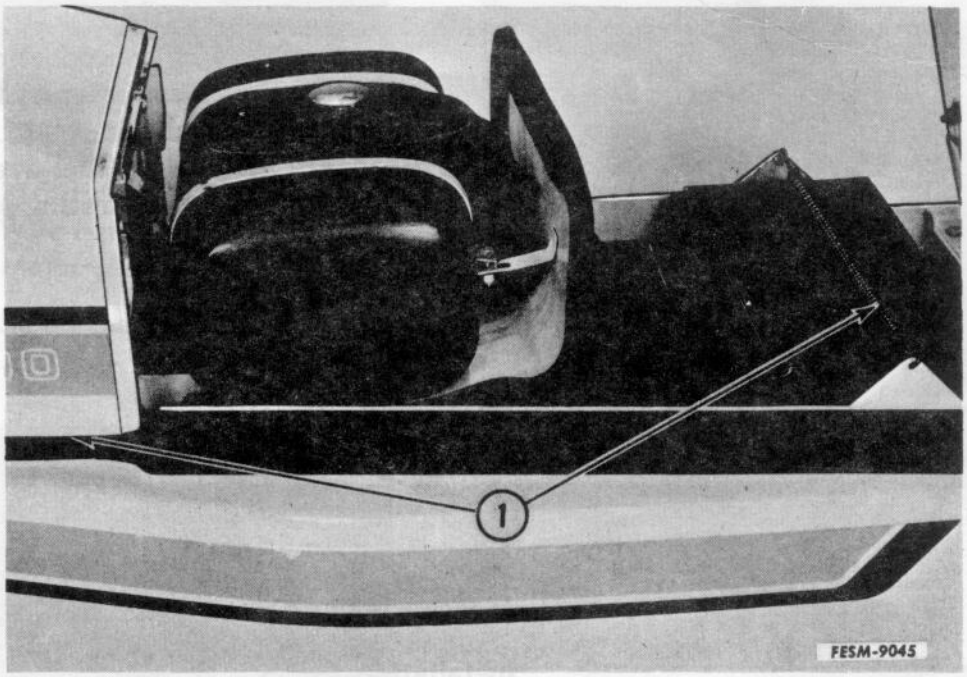

1. Side panel retainers

1. Disconnect the battery ground cable.

2. Raise the hood. Disconnect the spring and remove the wing nut under the cowl to take off the side panels.

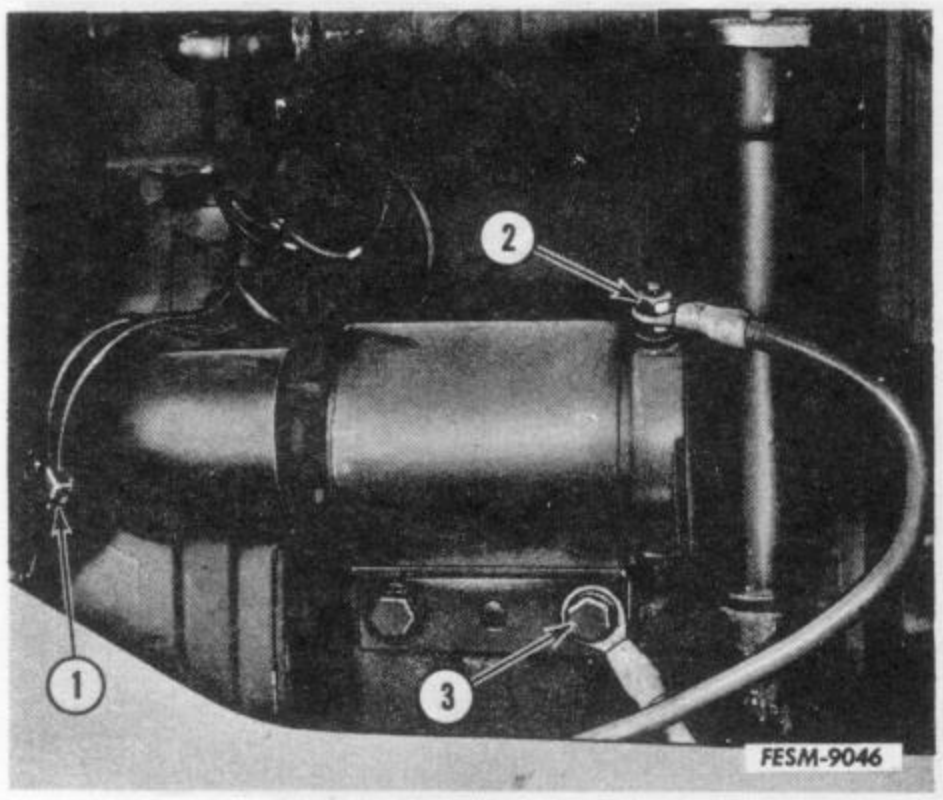

3. Disconnect the wire harness, starter cable and ground cable.

1. Wire harness connector
2. Starter cable
3. Ground cable

4. Disconnect head light wiring and remove front grille and hood as an assembly.

5. Disconnect the electric clutch wire.

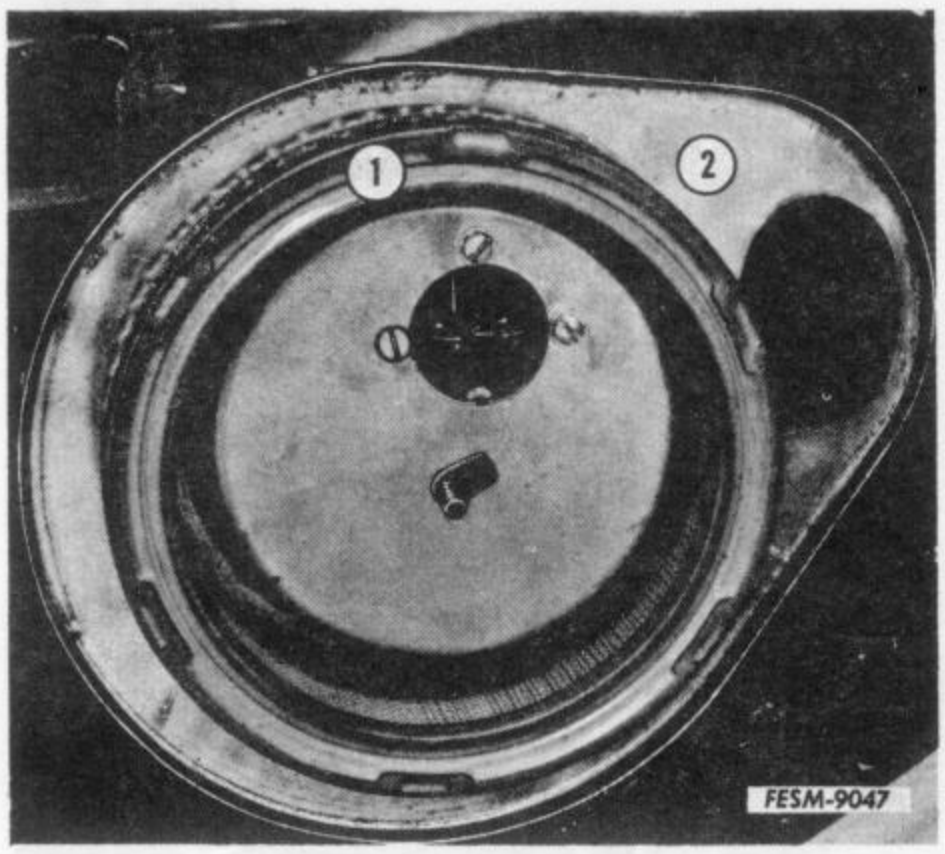

6. Remove the air cleaner assembly.

1. Air cleaner
2. Air cleaner assembly

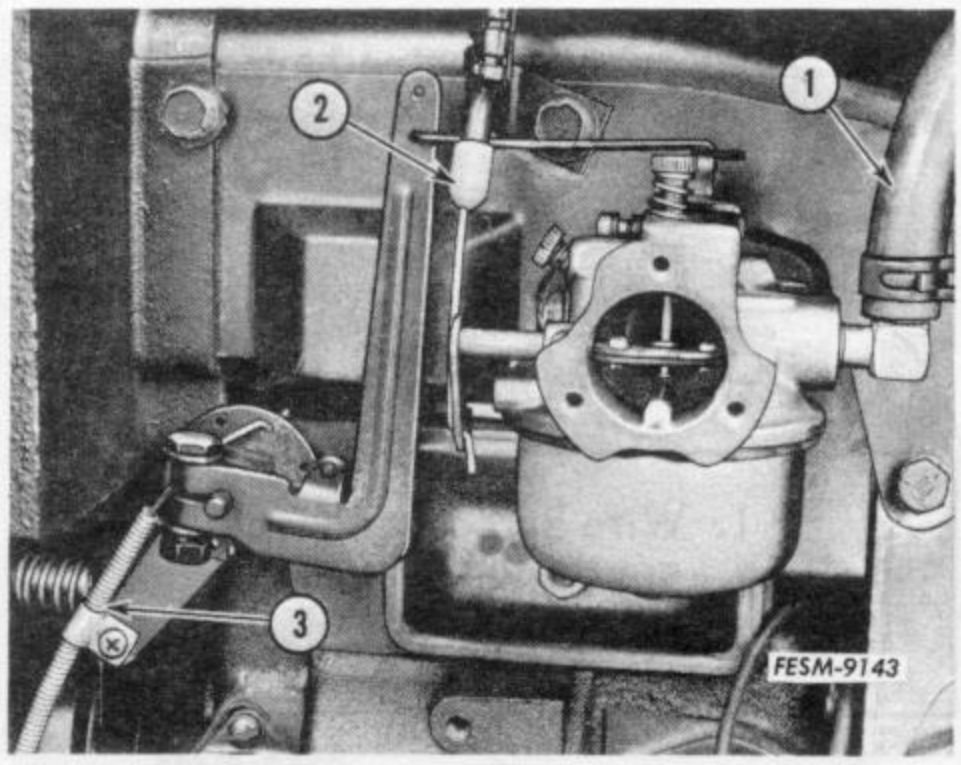

Model 800.

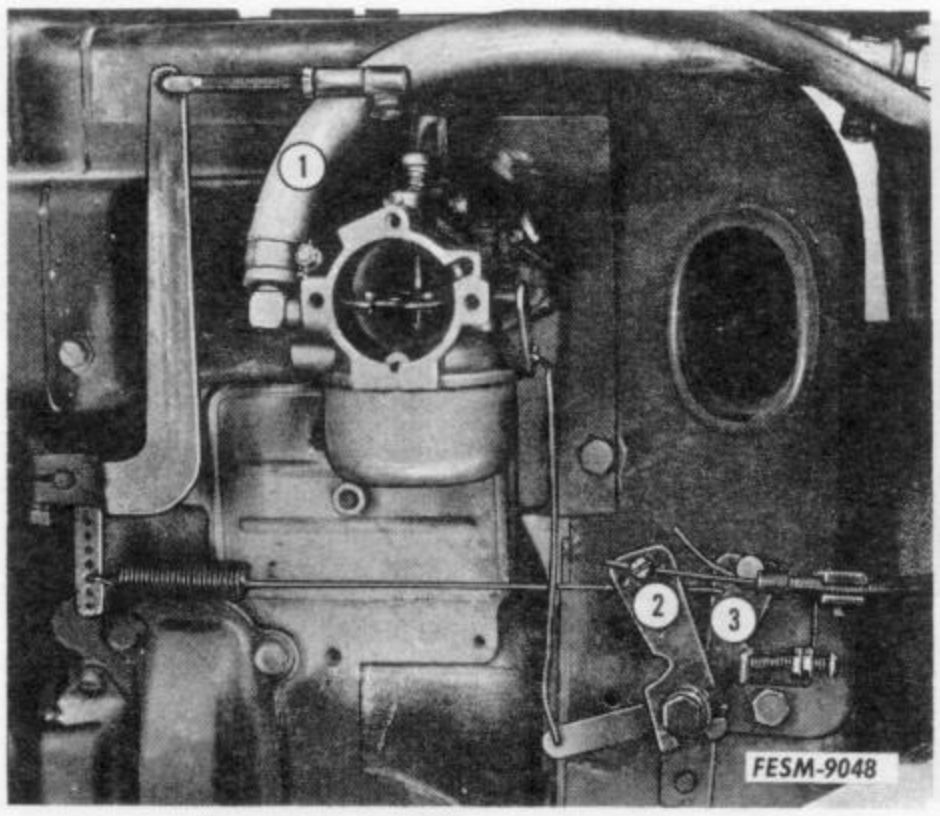

All other models.

1. Fuel line
2. Choke linkage
3. Throttle linkage

7. Disconnect the choke and throttle cables.

8. Shut off fuel and disconnect the fuel line at the carburetor.

9. Raise the front of the tractor and remove the engine mounting bolts.

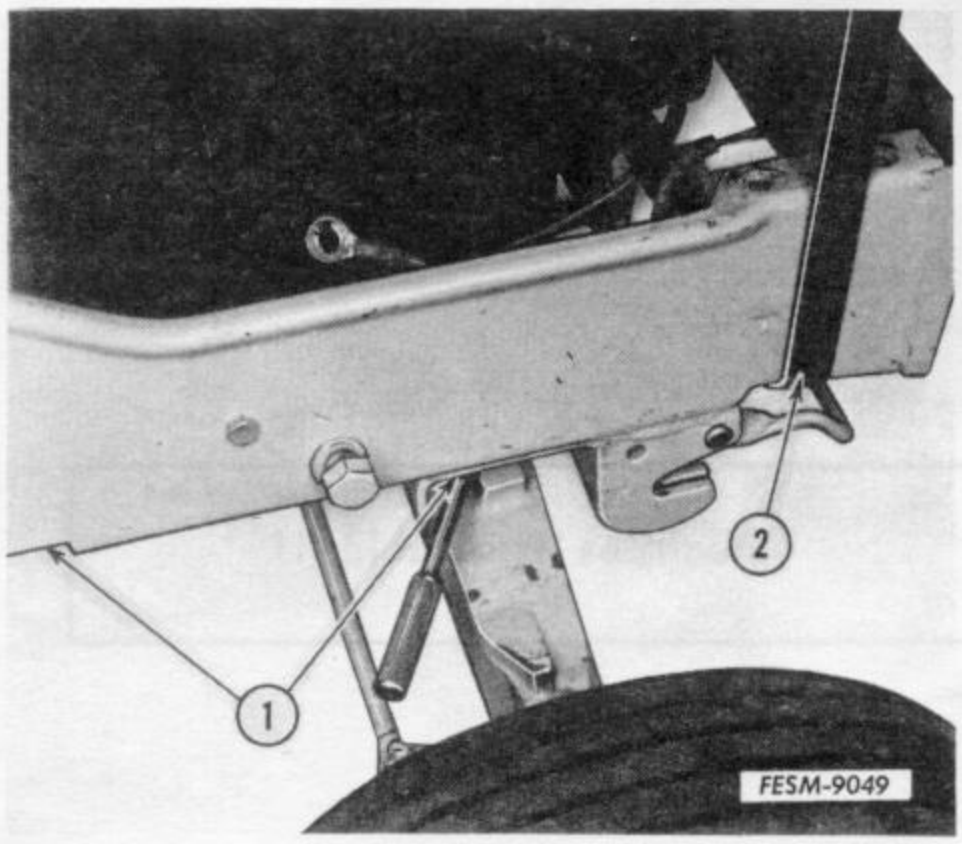

1. Engine mounting bolts
2. Lifting sling

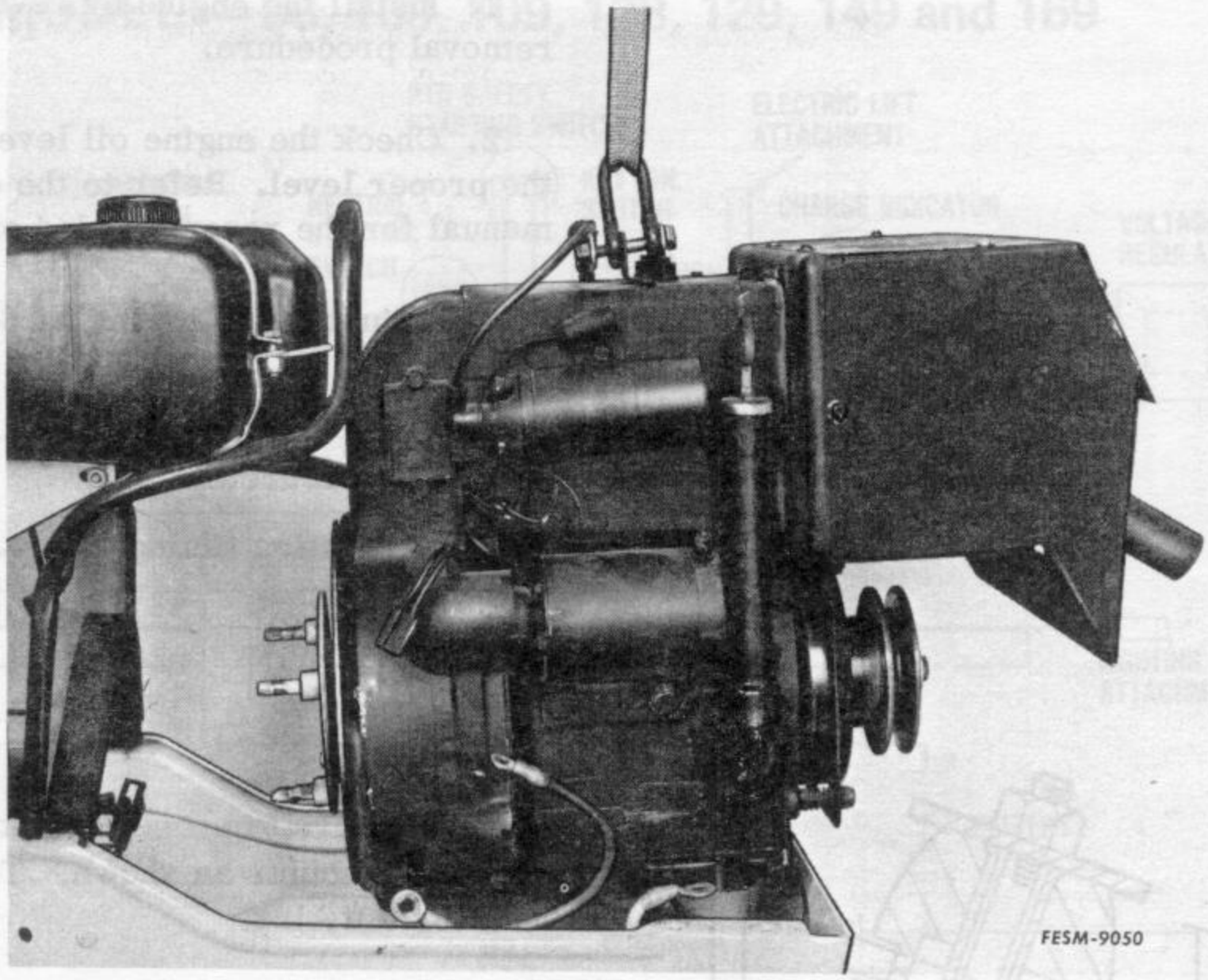

10. Models 800 and 1000:

a. Slide the engine forward and lift it out.

Model 1200:

a. Remove the gas tank, heat shield and mounting brackets.

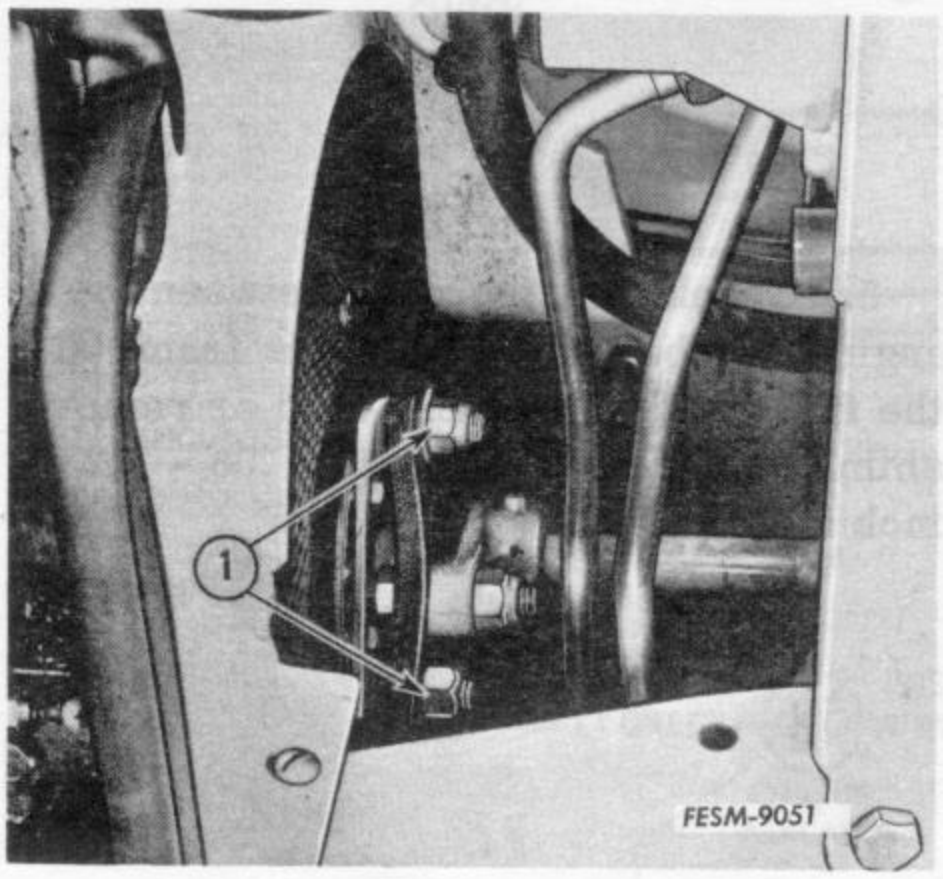

Hydrostatic drive.

Model 1200:

a. Remove the gas tank, heat shield and mounting brackets.

b. Lift the engine out.

Models 1250, 1450 and 1650:

a. Remove the gas tank, heat shield and mounting brackets.

b. Disconnect the drive shaft front flexible coupler from the engine.

c. Lift the engine out.

NOTE: For specifications and overhaul procedures, refer to Blue Ribbon Service Manual GSS-1465.

This manual covers the engine, fuel system, cranking motor and generating system components.

1. Disconnect here

Installation

1. Install the engine by reversing the removal procedure.

2. Check the engine oil level. Fill to the proper level. Refer to the operator"s manual for the recommended oil.

3. Adjust the following as necessary:

   a. Governor linkage

   b. Carburetor

   c. Ignition timing

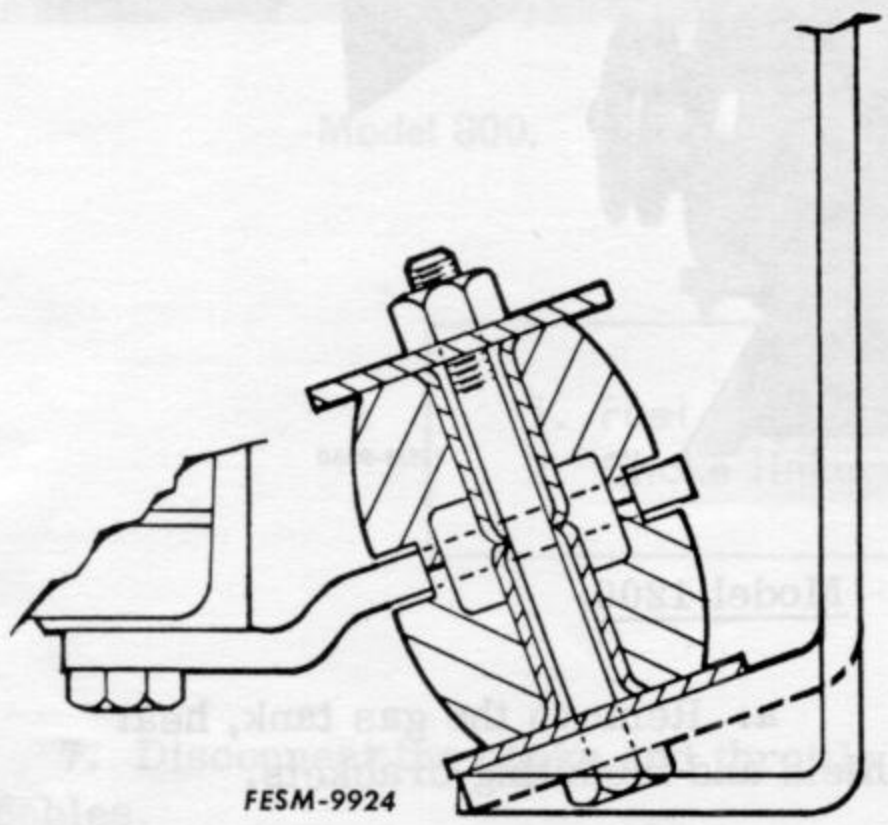

4. Be sure to properly install the engine isomounts as shown. Torque the nuts to 20 ft. lbs.

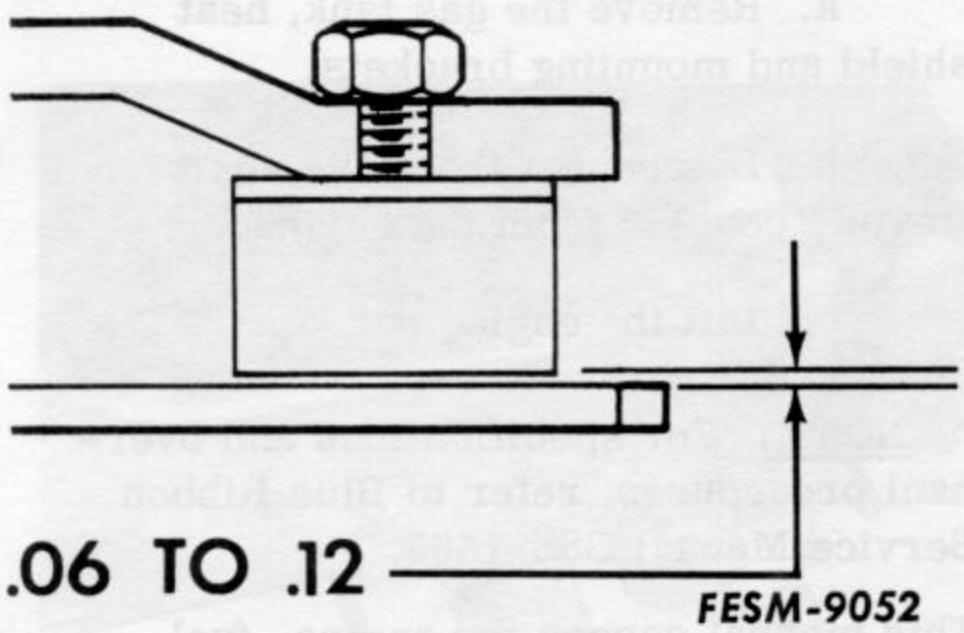

5. Check the clearance between the engine snubber mounts and the frame at the front of the machine. Add or remove shims as necessary to obtain .06 - .12 inch clearance.

ELECTRICAL WIRING DIAGRAMS

MODEL – 86, 108, 109, 128, 129, 149 and 169

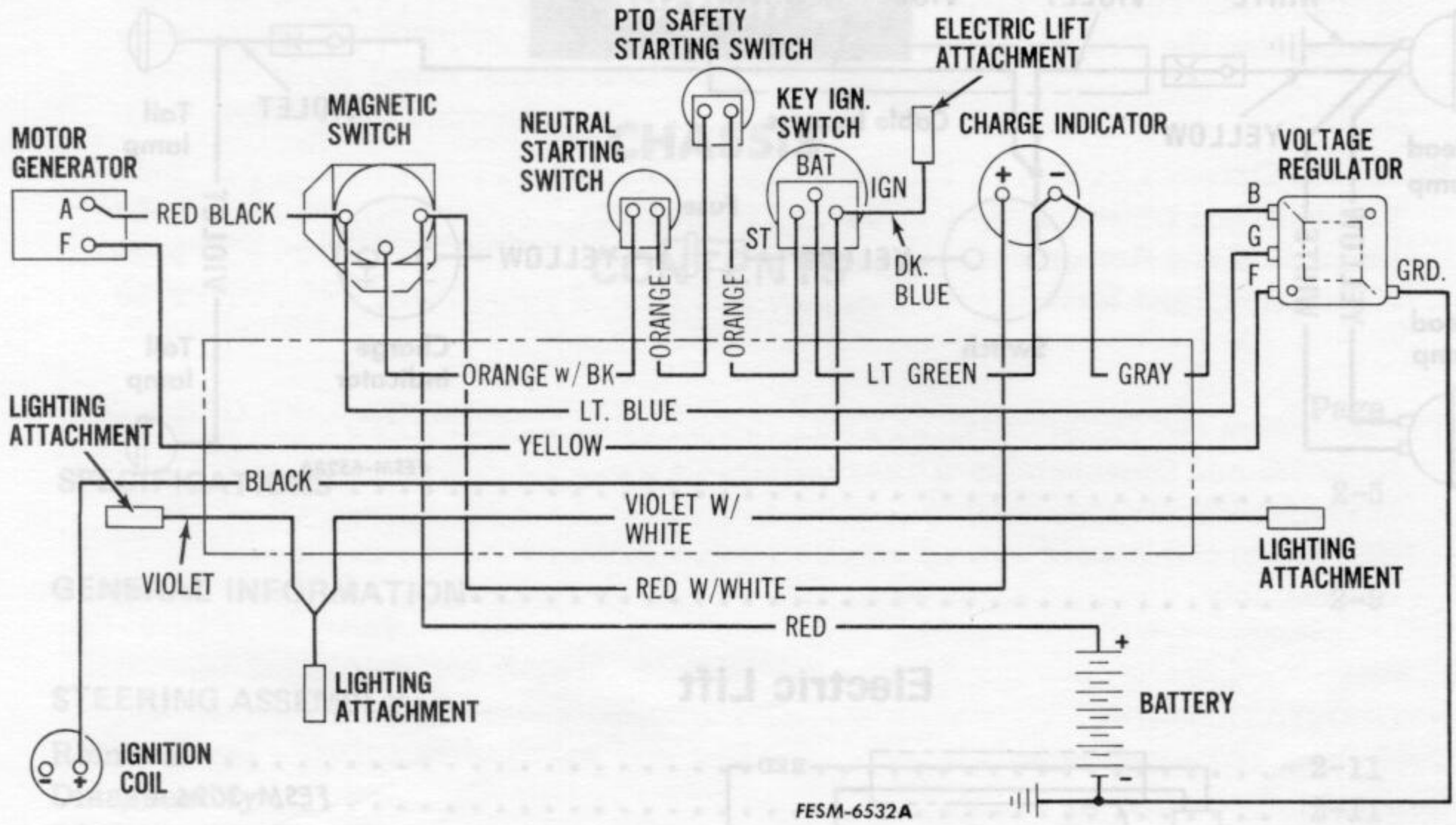

MODEL – 800, 1000, 1200, 1250, 1450 and 1650

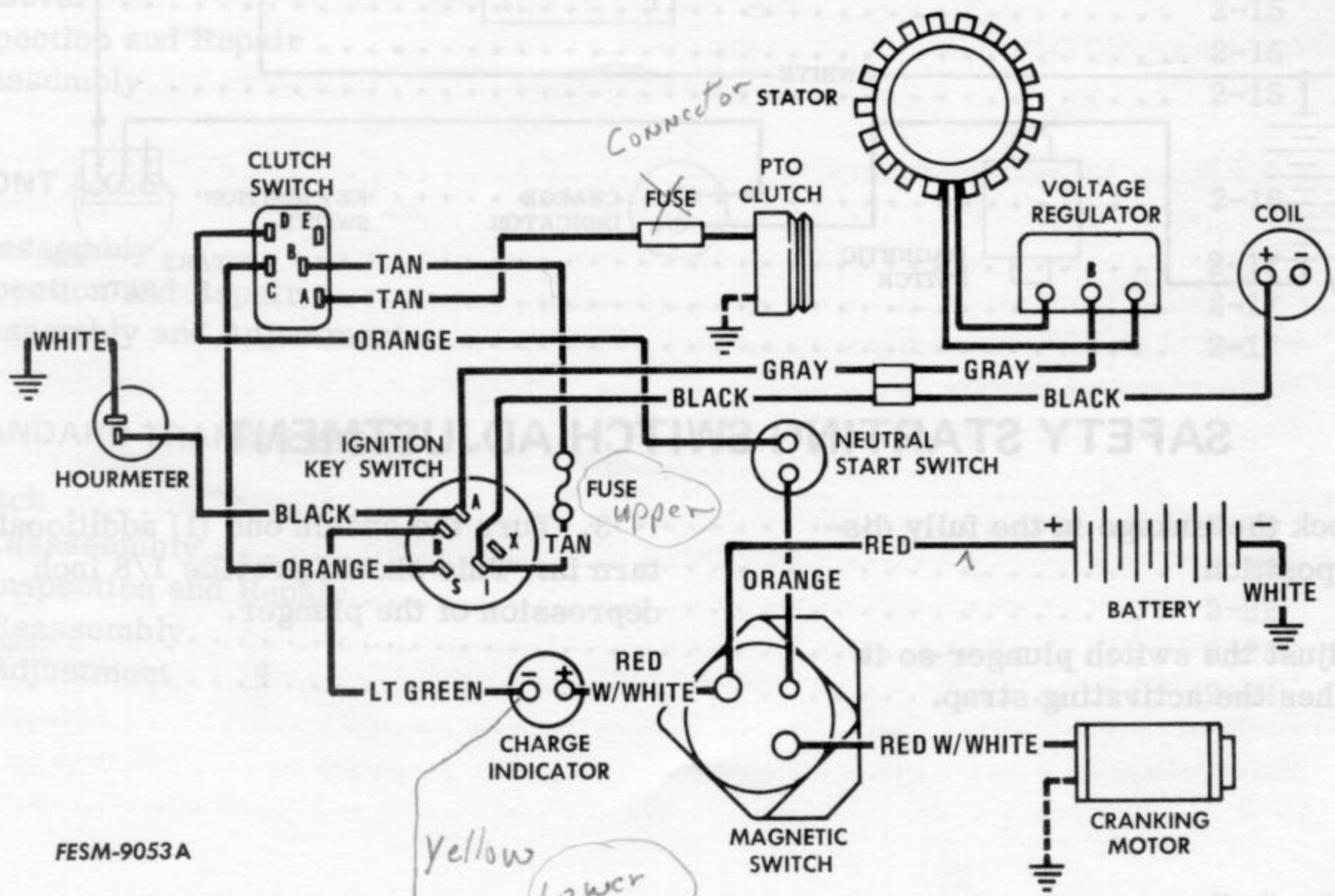

yellow

Lower Fuse

Light switch

yellow

purple

Electric Lighting

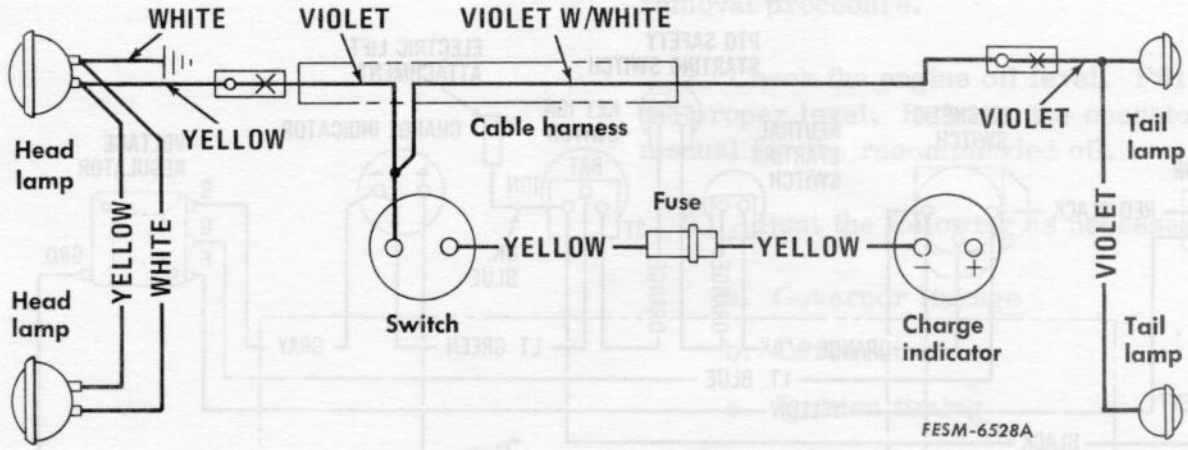

Electric Lift

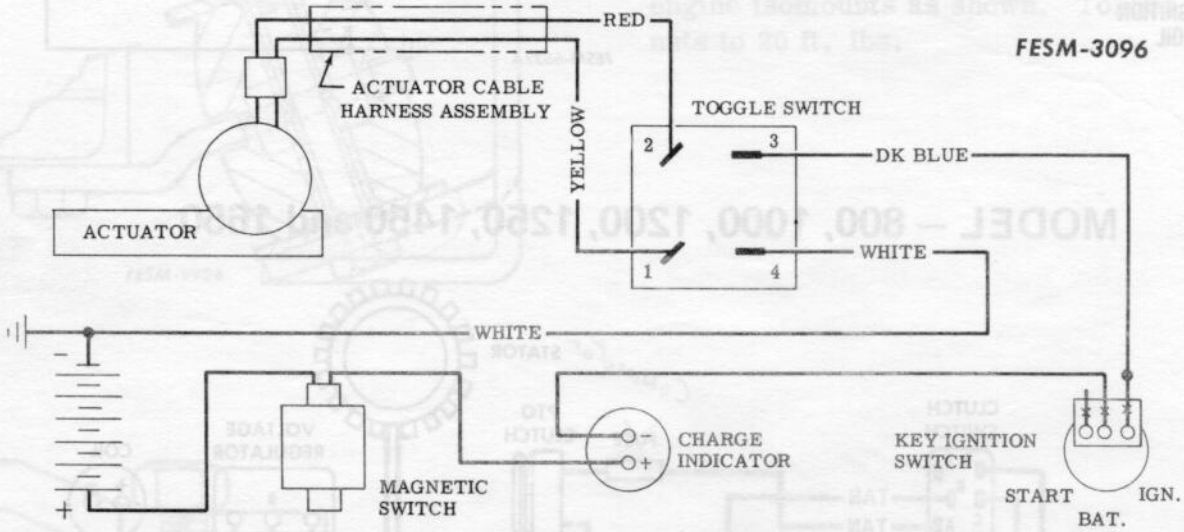

SAFETY STARTING SWITCH ADJUSTMENT

1. Lock the linkage in the fully disengaged position.

2. Adjust the switch plunger so it just touches the activating strap.

3. Turn the switch one (1) additional turn in. This should provide 1/8 inch depression of the plunger.

General Contents

GSS-1464 (Rev. No. 1)

Printed in United States of America

Section 2

CHASSIS

CONTENTS

Page

SPECIFICATIONS

Steering

Type	Cam and lever
Bearings	Ball

Front Wheels

End play - inch	Maximum 1/32
Bearings	Sealed pre-lubricated ball
Hub I.D. - inches	1.375 to 1.380
Toe-in - inch	Approximately 1/8
Camber angle - degrees	4
Caster angle - degrees	0
Turning radius	6 ft. 9 inches

Front Axle

Construction	I-Beam
Support - inch	Center pivot shaft dia. .747 to .750
Steering knuckle diameter - inch	.747 to .750
Steering knuckle bore - inch	.751 to .756

Clutch

Type	Single dry disc, spring loaded
Size - inches	4-1/2
Clutch release bearing	Sealed, pre-lubricated ball
Clutch loading spring	
Free length - inches	6.70
Test length - inches	5.18
Test load - lbs.	235 to 240
Clutch teasing spring	
Free length - inch	.442
Test length - inch	.370
Test load - lbs.	50

Creeper Drive

Type	Planetary gears
Sun gear	Integral part of case
Planet gears	3 - spur type
Bearings	Ball - front
	Bushing - rear
Reduction ratio	4 to 1

Front PTO Clutch — Mechanical

Torques	
Clutch, 1/4 x 1/2 inch cone point set screws	60 to 72 in. lbs.
Clutch, 1/4 x 1/4 inch flat point set screws	72 to 84 in. lbs.
Minimum clearance between the wear button and thrust button (clutch fully engaged) - inch	.000 - .030
Maximum out of flat of clutch pressure plate - inch	.010

Front PTO Clutch — Electric

Minimum clearance between the driving hub and driven disc - inch	.010
Current draw (at a nominal 12 volts) - amps	3.5-4.0
Field resistance - ohms	2.8-3.6

Rear PTO

Type	Transmission driven
Size	978 diameter - 10 spline
Speed	515 rpm CCW at governed engine speed
Bearings (PTO shaft)	
Rear	Ball
Front (pilots into transmission clutch shaft)	Bronze bushing
I.D. (after pressing into shaft) - inch	.3755

Shaft, PTO (diameters)
Front bushing location - inch . . . . . .3725 to .3732
Rear bearing location - inch . . . . . .9842 to .9846

Retainer (rear bearing and oil seal)
Bore for rear bearing - inches . . . . . 2.0470 to 2.0478
Bore for oil seal - inches . . . . . 1.874 to 1.875

Oil Seal is installed with lip toward lubricant

Brakes

Type . . . . . Caliper
Location . . . . . Outer end of axles

Reduction Drive

Input shaft with integral gear . . . . . 12 teeth
Driven gear . . . . . 84 teeth
Backlash - inch . . . . . .004 to .011
Bearings . . . . . Ball - front
Needle - rear

Transmission-Gear Drive

Type . . . . . Selective sliding spur gears
Gears forward 3
Gears reverse 1
Bearings
Countershaft . . . . . Ball - front
Roller - rear
Main shaft . . . . . Ball - front
Needle - rear

Countershaft and bearing spacer lengths:
Between front bearing and 3rd speed driven gear - inch . . . . Beveled edge to bearing
.848 to .852
Between 3rd speed driven gear and 2nd speed driven
gear - inches . . . . . 1.310 to 1.314
Between 2nd speed driven gear and 1st speed driven
gear - inch . . . . . .310 to .314
Between 1st speed driven gear and reverse driven
gear - inch . . . . . .686 to .690
Between reverse driven gear and rear bearing - inch. . . . . Beveled edge to bearing
.690 to .694

Special Torques (foot pounds)

Reduction gear 55
Transmission countershaft nut 85
Transmission countershaft bearing retainers 20
Reduction housing to transmission 80

Hydrostatic Drive

Pressure

Charge pump w/o hydraulic lift (at maximum idle speed) - psi . . . . . 90 to 165
Charge pump with hydraulic lift (at maximum idle speed) - psi . . . . . 200 max.
Implement lift relief valve - psi . . . . . 500 to 625

Tolerances

Slipper thickness (minimum - inch) (pump and motor) 121

All slippers in block assembly must be within .002 inch thickness of each other.

Spring Specifications

Spring Description	Free Length (inches)	Test Length (inches)	Test Load (pounds)
Motor and pump block assemblies	1-3/64-1-1/16	19/32	63-75
Charge pump relief valve	1.057	.525	7.0-7.6
Implement relief valve	0.780	.674	33-39

Special Torques (foot pounds)

Charge pump capscrews 52
Center section-to-transmission case capscrews 35
Motor swash plate (fixed) hexagon socket head capscrews 67
Hydrostatic unit to differential housing 30

Differential

Type	Bevel gears and pinions
Number of pinions	2 (10 teeth)
Number of side gears	2 (16 teeth)
Bearings (two)	Tapered roller
Pre-load - in. lbs.	1.5 to 8.0
Adjusting shims - inch	.004, .007, .015, .030
Bevel pinion and drive gear backlash - inch	.003 to .005
Bevel pinion location	Integral part of countershaft
Drive gear location	In differential case
Ratio (bevel gear and pinion)	13 to 46

General-Special Torques (foot pounds)

Wheel lug bolts	56 to 63
Steering wheel	32 to 37
Front wheel capscrews	35 to 40
Drag link and tie rod ball joint nuts	35 to 40
Steering sector jam nut	40
Cam follower lock nut	40

GENERAL INFORMATION

The clutch and brake are operated by a single foot pedal located on the left side of the tractor. Separate adjustments are provided for each unit.

Models equipped with power lift have a control lever located on the right side of the instrument panel for implement control.

Models not equipped with power lift have an implement control lever conveniently located on the right side of the tractor.

On gear driven models power is transferred directly to the clutch by a driving plate attached to the engine flywheel pulley.

Clutch

A friction disc, held between two spring loaded plates on the clutch shaft, transfers power through the clutch shaft to the gear reduction unit on standard tractors, and to the underdrive (creeper) unit on tractors so equipped.

Brakes

Friction material pads apply "Caliper Type" holding to brake discs located on the outer end of both rear axles. Braking is applied to both rear wheels through their individual disc brake assembly.

Reduction Drive-Gear Drive

The reduction drive housing is located ahead of and is secured to the transmission housing. The reduction input shaft with gear is driven by the clutch shaft (or creeper attachment if so equipped), and drives the reduction gear located on the front end of the transmission input shaft. The ratio of reduction is seven to one. The input shaft with gear is supported by a ball bearing at the front and a needle roller bearing at the rear.

Transmission-Gear Drive

Sliding spur gears are located on the transmission input shaft and mesh with spur gears on the countershaft. Shafts are mounted in ball, roller, and needle bearings. Gears have crowned induction hardened teeth with rounded edges for ease of shifting and long life. The reverse idler gear is mounted on a separate shaft.

Differential

Two pinions, a pinion shaft and two side gears are positioned in the one piece cast iron carrier case. The gears are carburized, hardened alloy steel.

The differential drive gear is riveted to the carrier case. The carrier assembly is mounted in tapered roller bearings. Bearings are pre-loaded to control deflection of the assembly when loaded.

Rear Axles

The rear axles are splined on their inner end where they are supported and driven by the differential side gears. Snap rings secure the axle shafts in the side gears.

A needle bearing in each axle carrier supports the rear axle outer end.

Front Axle Steering

The cast iron front axle has "I" beam construction with raised arch center section. The axle is supported by a pivot shaft in the main frame cross channel bracket.

A spiral worm cam and lever with single follower and control arm actuates the ball socket drag link to the left front steering knuckle. The ball socket tie rod connects the right and left steering knuckles. The worm (cam) shaft is supported by ball bearings. Design features provide camber, and toe-in for easy steering and trouble free operation.

Front Wheels

The wheels are formed from sheet steel and welded to steel tubing. A pre-lubricated sealed ball bearing is pressed into each side.

Creeper Attachment

A four to one ratio unit is available for field application. This planetary gear reduction unit is mounted ahead of and is secured to the front of the reduction drive. A speed selection lever provides standard or "creeper" speed as desired.

STEERING ASSEMBLY

Removal

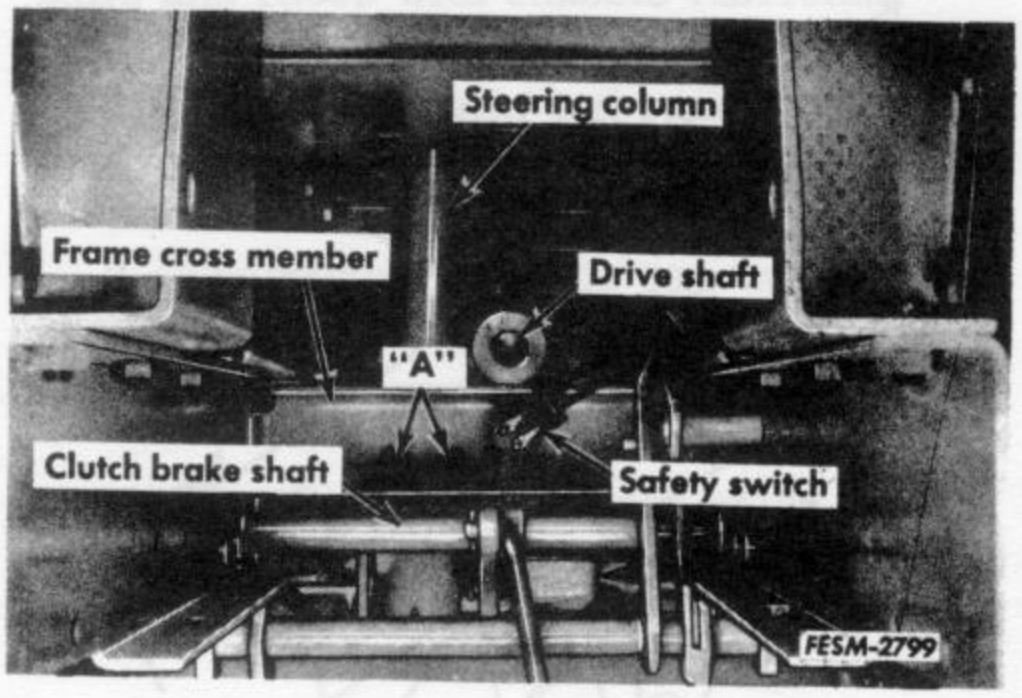

A. Mounting bolts

1. Hold the steering wheel with front wheels in straight ahead position. Remove the steering wheel.

2. Remove the drag link rear ball joint from the steering unit lever.

3. Remove clutch shield bottom sheet.

4. Remove capscrews "A" from the frame cross member and steering unit.

5. Lower the steering column assembly through the instrument panel pedestal and grommet.

Disassembly

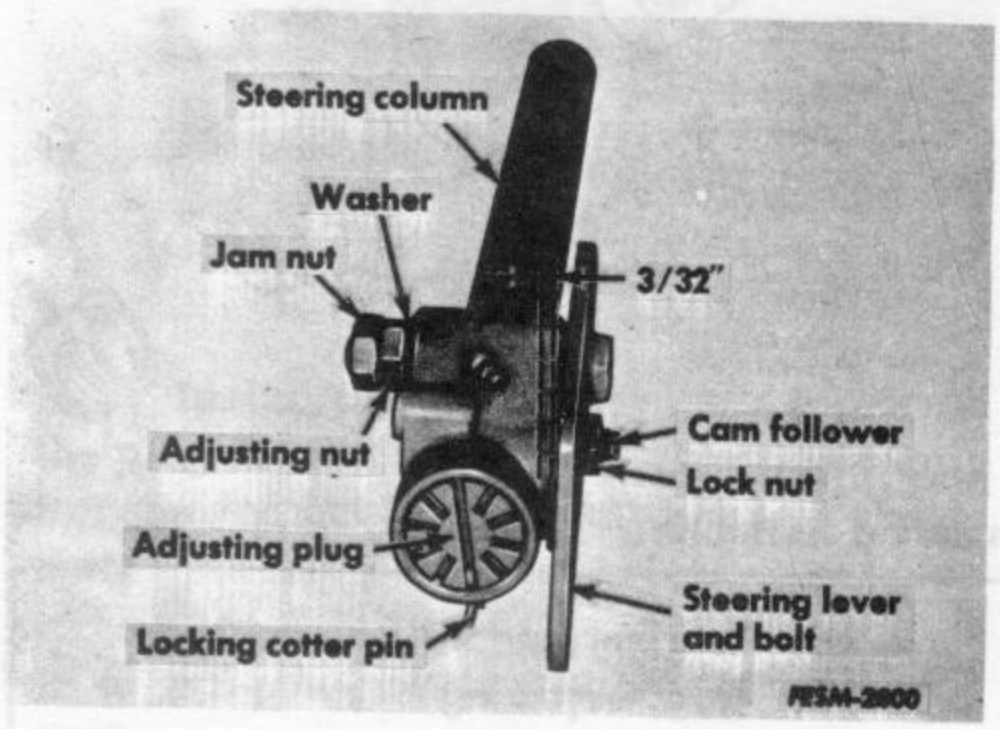

1. Secure the steering lever and bolt in a vise.

2. Remove the lever bolt jam nut, adjusting nut, and washer.

3. Slide the column and housing assembly away from the lever, bolt and cam follower.

4. Remove the adjusting plug.

5. Remove the steering cam and bearings from the housing.

Inspection and Repair

1. Wash all parts in cleaning solvent, then dry thoroughly.

2. Inspect the cam follower for wear (flat spots).

3. Inspect the cam ends, bearings and races for wear, roughness and pitting.

4. Inspect the cam grooves for wear, roughness and galling.

5. Inspect the housing for cracks and stripped threads.

6. Inspect the upper bearing (nylon bushing) for wear or damage.

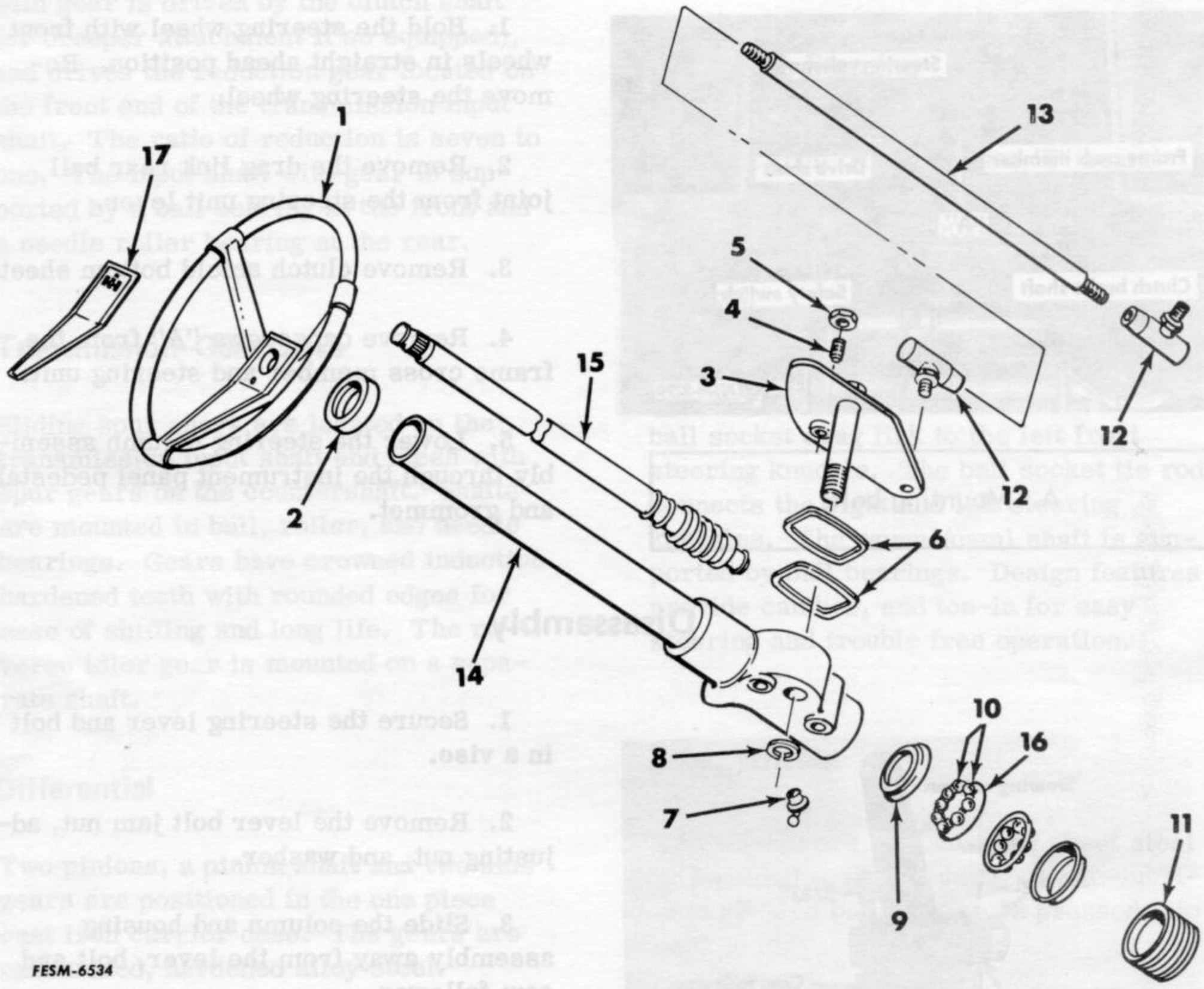

Exploded view of steering assembly.

1. Steering wheel
2. Bearing
3. Lever
4. Stud
5. Nut
6. Seal and retainer
7. Fitting
8. Washer
9. Bearing
10. Retainer and ball assembly
11. Plug, adjusting
12. Joint
13. Link, drag
14. Tube assembly
15. Cam and tube
16. Retainer
17. Insert

Reassembly and Adjustment

1. Thoroughly coat the cam ends, balls and races with chassis lubricant.

2. Install the balls and races on the cam ends.

3. Thoroughly coat the cam with chassis lubricant then install into the housing and column assembly.

NOTE: Be sure the races enter the housing squarely and are not "cocked".

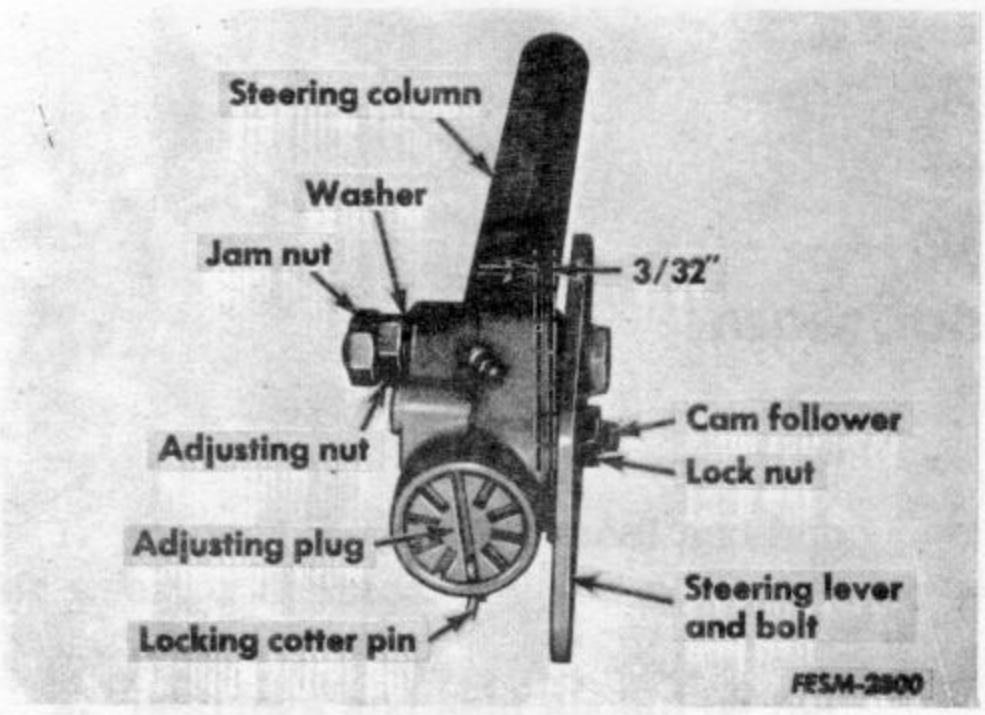

4. Install the adjusting plug. Screw the plug inward until end play of the cam is removed but turns freely. Insert the cotter pin in the nearest hole.

5. Fill the housing with chassis lubricant.

6. Loosen the cam follower locknut, then "back out" the cam follower two turns.

7. Install the seal, retainer and lever-bolt assembly to the housing.

8. Install the washer and adjusting nut. Tighten the adjusting nut sufficiently to provide good seal compression. Refer to illustration for adjustment dimensions. Secure with the jam nut. Tighten jam nut to 40 ft. lbs. Lubricate at the fitting in the housing slowly until lubricant begins to seep out.

9. "Center" the steering cam by rotating the steering shaft half-way between full right and full left turn.

10. Adjust the cam follower inward to eliminate backlash, then tighten locknut to 40 ft. lbs. Turn steering shaft full right and left to check for binding.

11. Replace the steering assembly in the tractor chassis. Secure with two capscrews through the frame cross member.

12. Replace clutch shield bottom sheet.

13. Connect the drag link.

14. Replace the steering wheel and secure with nut.

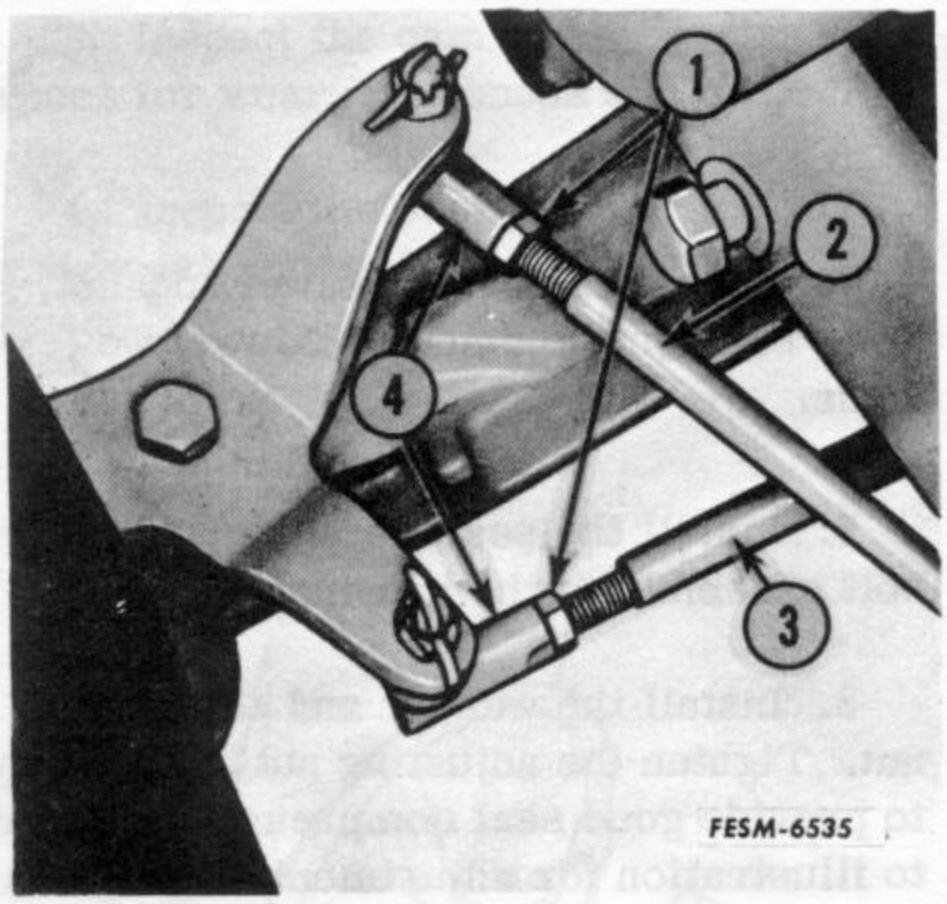

1. Locknuts
2. Drag link
3. Tie rod
4. Ball joints

15. Adjust the tie rod to provide approximately 1/8" toe-in as follows:

a. Remove one of the tie rod ball joints and loosen the locknut.

b. Screw the ball joint in or out to obtain the specified toe-in of approximately 1/8" and tighten the locknut.

c. Connect the ball joint to the steering knuckle and be sure to install the cotter pin.

16. Adjust the drag link to proper length to place front wheels in the straight ahead position when the steering assembly is "centered."

FRONT WHEELS AND BEARINGS

Removal

1. Lock the brake and block the rear wheels. Jack up the front axle.

2. Remove the capscrew and flat washer from the outer end of the front spindle.

3. Slide the wheel and bearings from the spindle.

NOTE: The bearings are a press fit in the wheel and a slip fit on the spindle.

4. Wheel bearings can be driven from the wheel hub with a hammer and long drift punch. Drive from the inside toward the outside.

Inspection and Repair

1. Inspect the entire wheel and hub for wear or damage.

2. Bearings and seal should be inspected and replaced as necessary.

3. Bearing fit to wheel must be tight. If not, replace or repair wheel.

Reassembly

1. If the bearings were removed, lubricate and press in new ones. Be sure force is directed to the outer race only.

2. Slide the wheel and bearing assembly over the spindle and secure with capscrew and flat washer.

3. If excessive end play exists (maximum 1/32"), place a sufficient thickness of shim washers (3-4" ID) over the outer end of the spindle and between the retaining washer and wheel bearing to take up excess end play.

FRONT AXLE

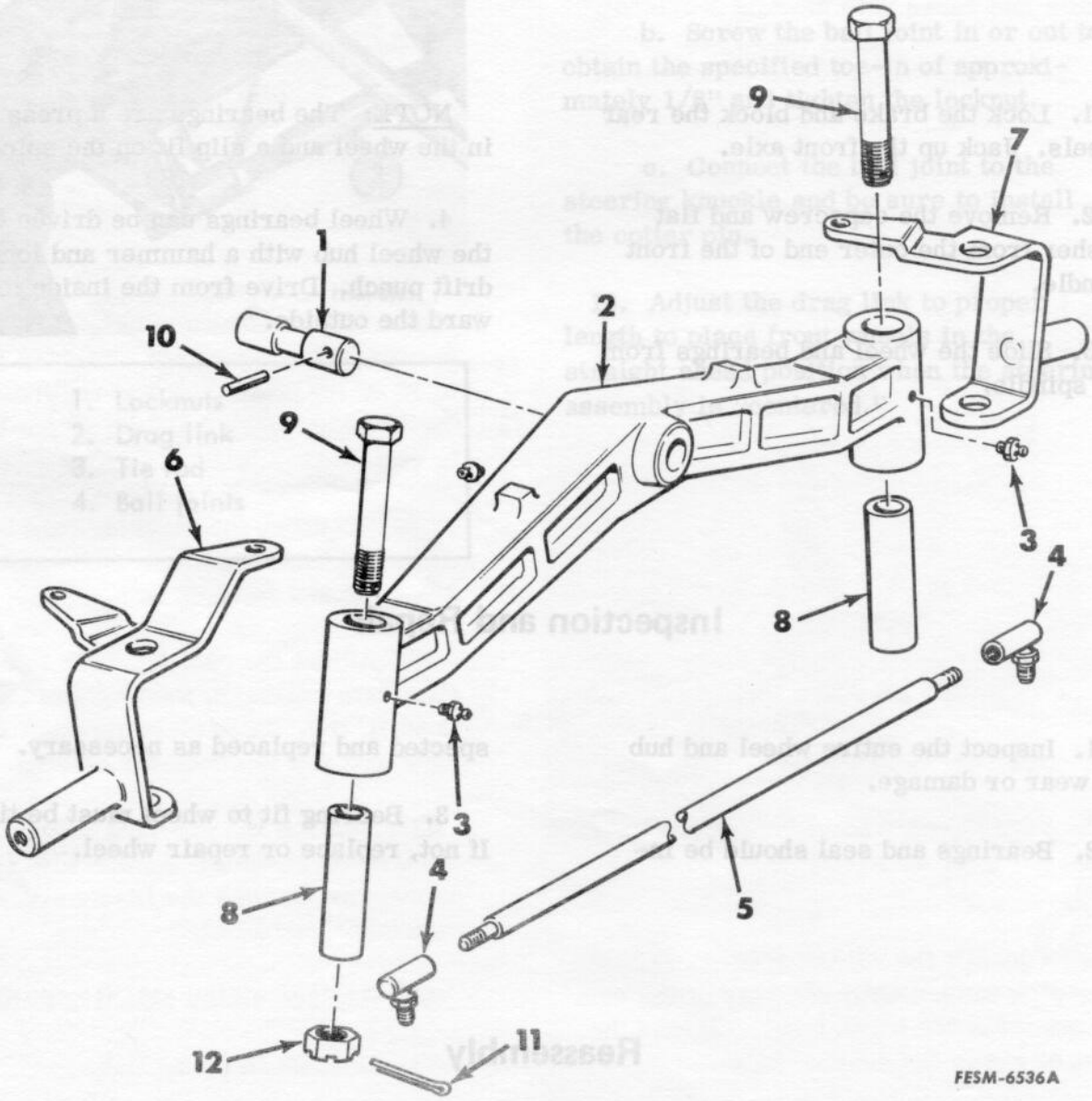

1. Axle pivot pin
2. Axle
3. Fitting
4. Ball joint
5. Tie rod
6. Left hand steering knuckle
7. Right hand steering knuckle
8. Spacer
9. Steering knuckle bolt
10. Retaining pin
11. Cotter key
12. Nut

Disassembly

1. Lock the brake, raise the front of the tractor and support it with suitable stands.

2. Remove the front wheels.

3. Disconnect the drag link from the left steering knuckle.

4. Remove the tie rod.

5. Remove the steering knuckle bolt, steering knuckle and spacer from both sides.

6. Drive out the retaining pin from the axle pivot pin.

7. Remove the axle pivot pin and front axle.

Inspection and Repair

Clean and inspect all parts closely for wear or damage. Replace as necessary.

Reassembly and Adjustment

1. Coat the axle pivot pin and its bore in the axle with IH 251 HEP or its equivalent.

2. Position the axle in the support bracket and install the pivot pin. Install the retaining pin through the bracket and pivot pin.

3. Install the steering knuckles. Tighten the nut to 80 ft. lbs. Install the cotter key. If the cotter key cannot be installed, tighten the nut only enough to line up the slot with the hole.

4. Install the tie rod and connect the drag link to the left steering knuckle.

5. Install the wheels.

6. Check and adjust toe-in. Adjust the tie rod to provide approximately 1/8" toe-in.

7. Adjust the drag link to proper length to place front wheels in the straight ahead position when the steering assembly is centered.

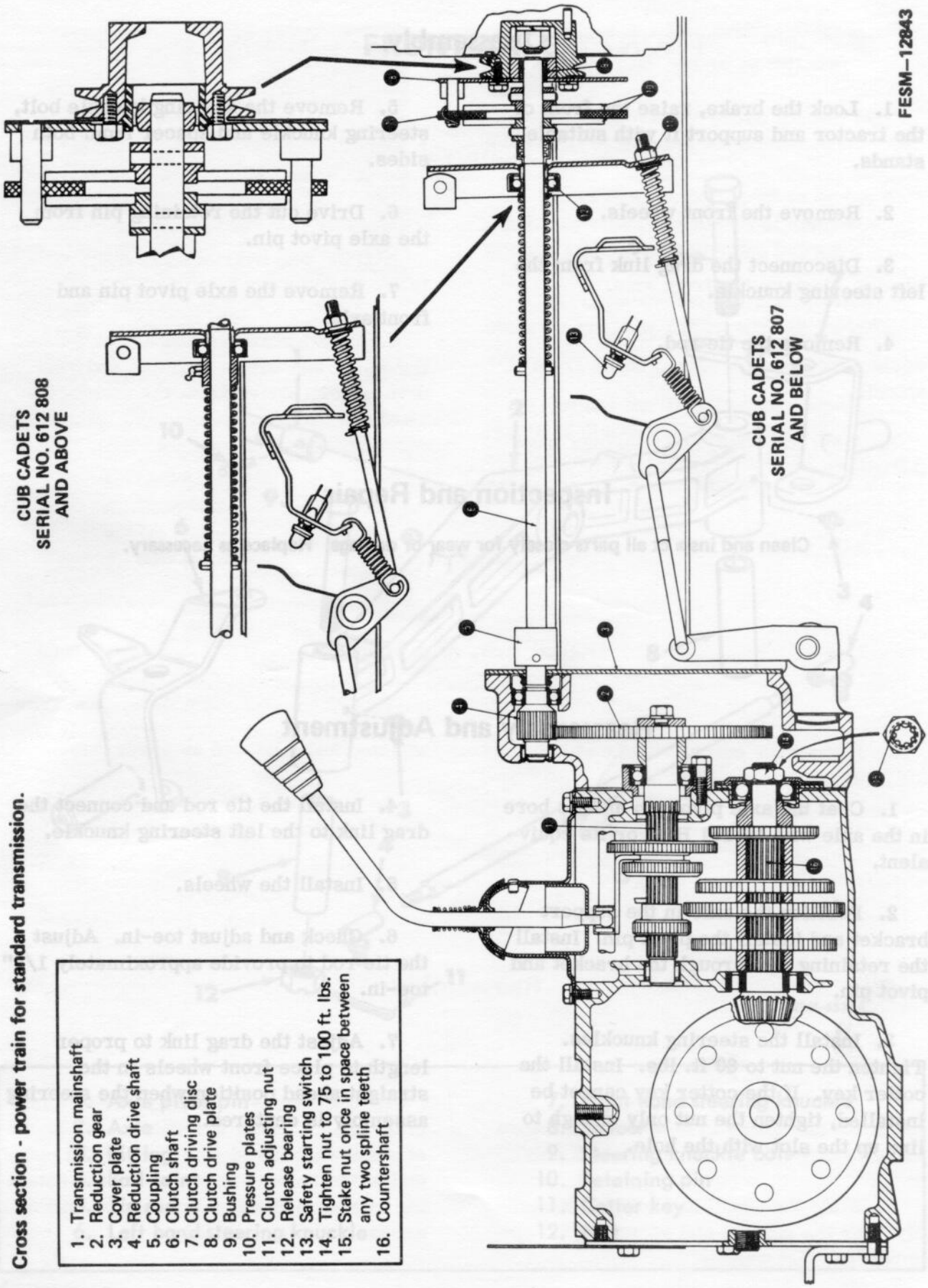

Cross section - power train for standard transmission.

1. Transmission mainshaft
2. Reduction gear
3. Cover plate
4. Reduction drive shaft
5. Coupling
6. Clutch shaft
7. Clutch driving disc
8. Clutch drive plate
9. Bushing
10. Pressure plates
11. Clutch adjusting nut
12. Release bearing
13. Safety starting switch
14. Tighten nut to 75 to 100 ft. lbs.
15. Stake nut once in space between any two spline teeth
16. Countershaft

CLUTCH

Disassembly

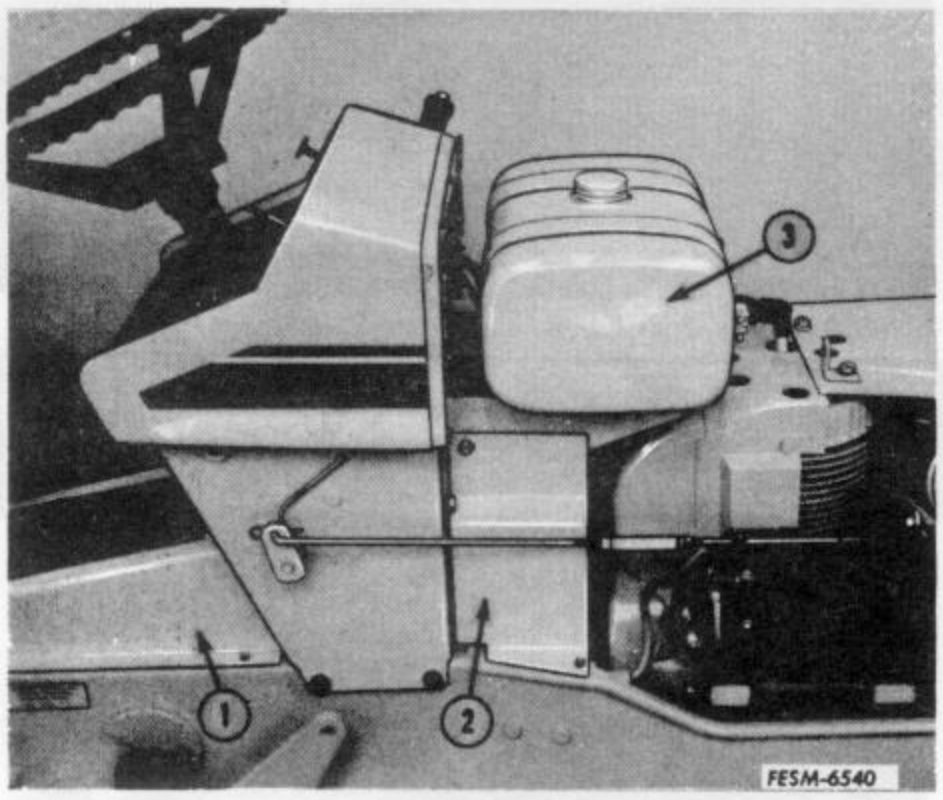

1. Remove the extension panels.

2. Remove the frame cover.

1. Frame cover
2. Extension panel
3. Fuel tank

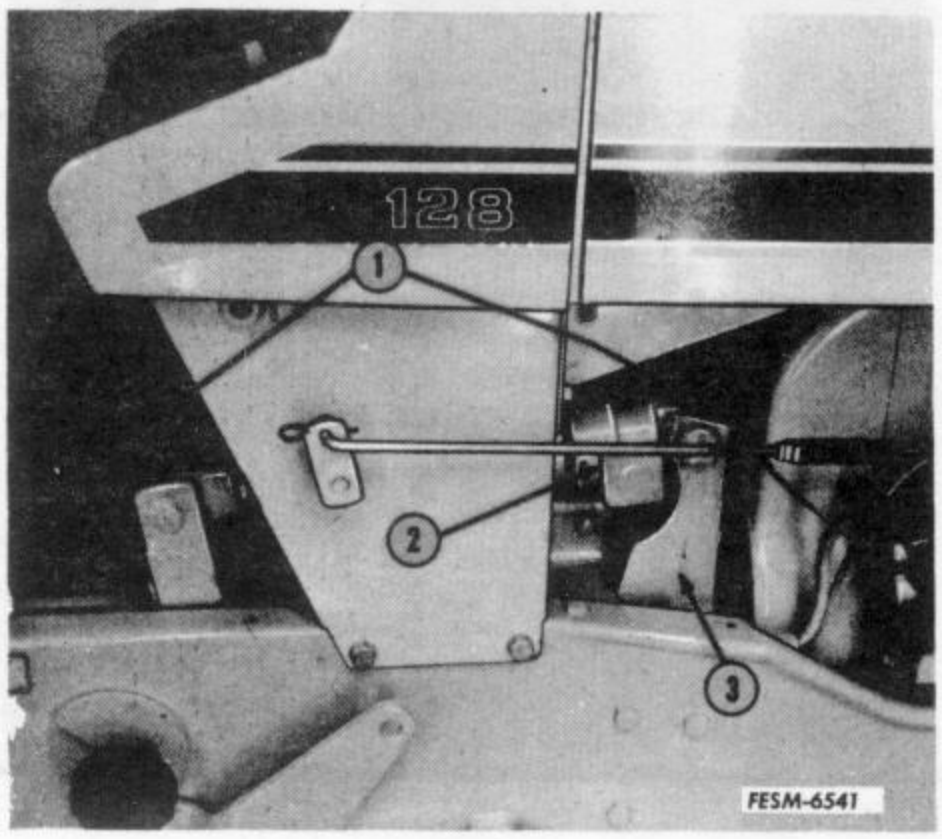

3. Disconnect the battery ground cable from the battery. Remove the electric lift and bracket assembly if equipped.

1. Cotter key
2. Electric lift cylinder
3. Bracket

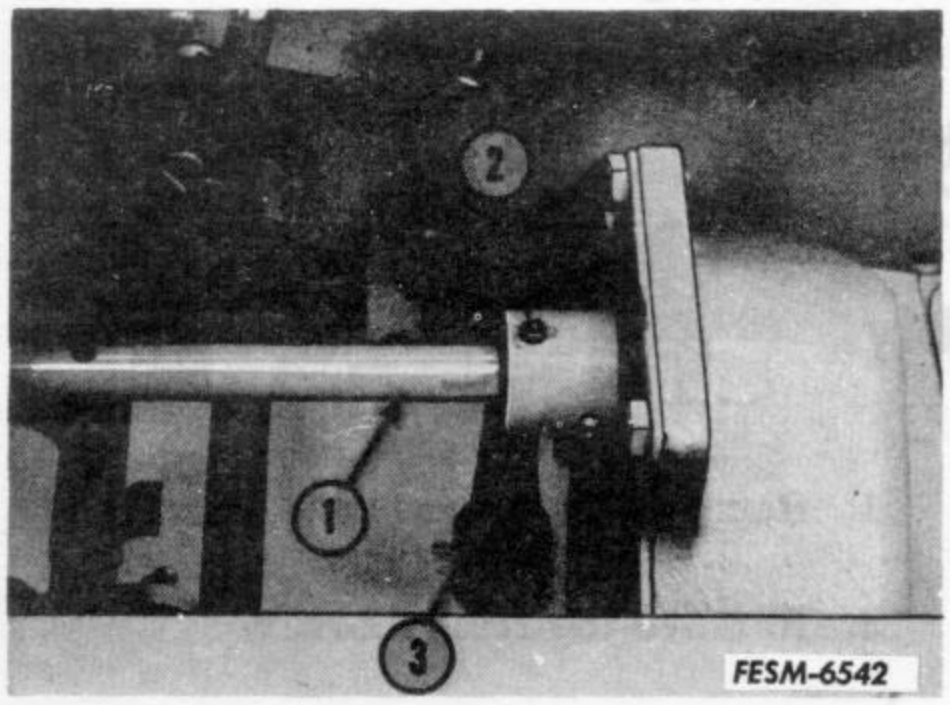

1. Drive shaft
2. Roll pin
3. Rear coupling

Models 86, 108 and 128:

4. Remove the roll pins from the rear coupling and slide it forward on the shaft.

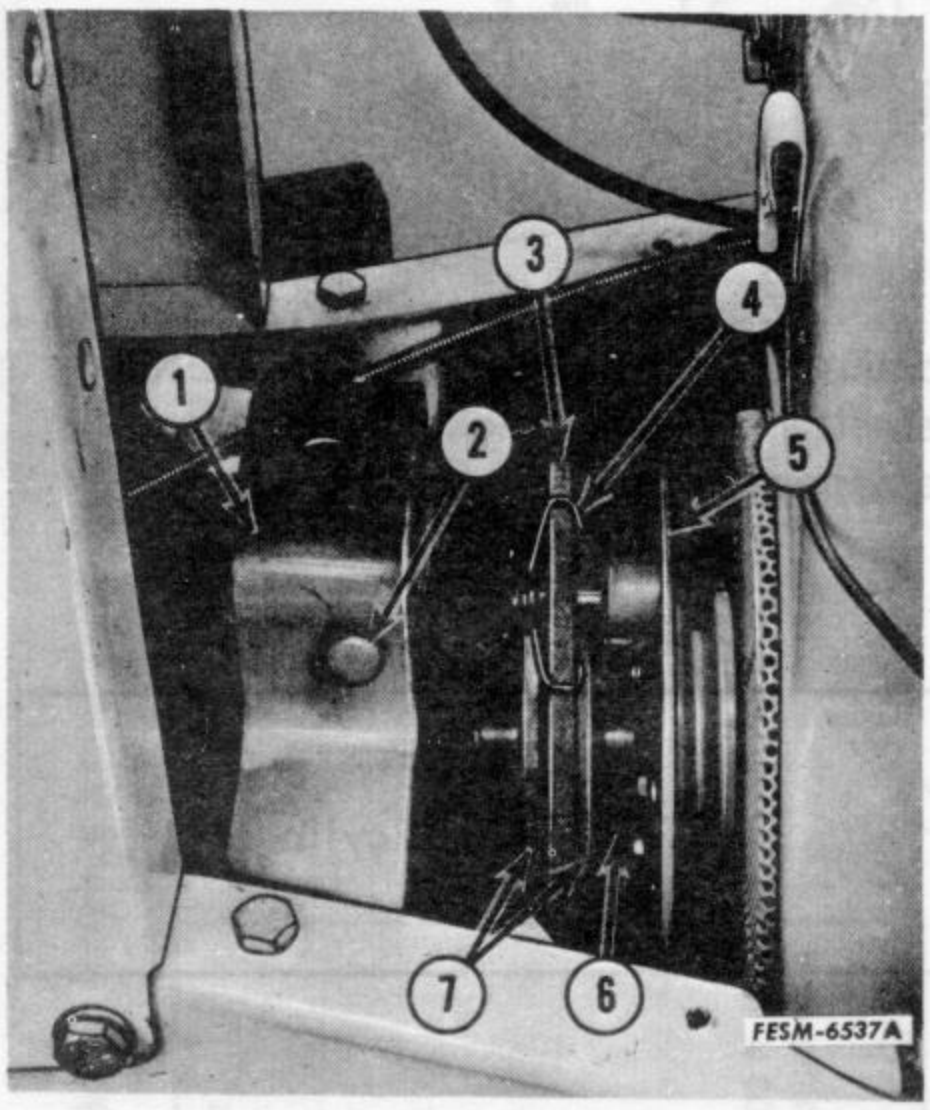

1. Hanger assembly
2. Pivot pin
3. Driving disc
4. Drive disc spring
5. Drive plate
6. Locating pin
7. Pressure plate assembly

5. Remove the pivot pin and the hanger assembly.

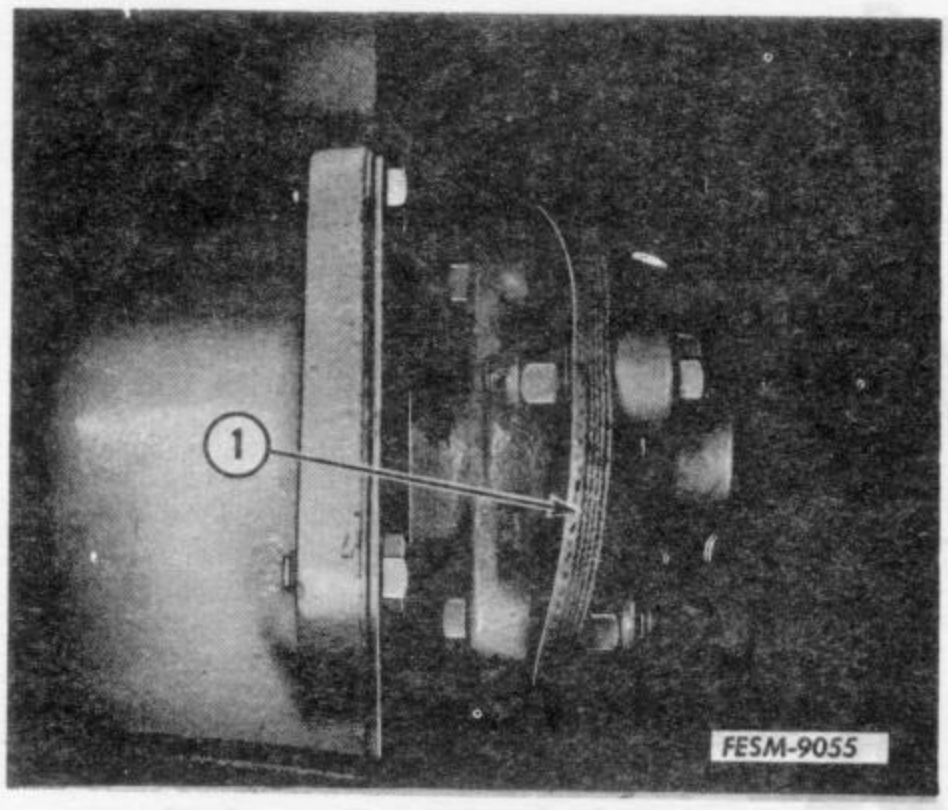

1. Rear flex coupling

Models 800, 1000 and 1200:

4a. Remove the flex coupling from the rear of the drive shaft.

NOTE: There is a steel ball spacer located in the flex coupling to properly locate the drive shaft. Be sure the ball is in place during reassembly.

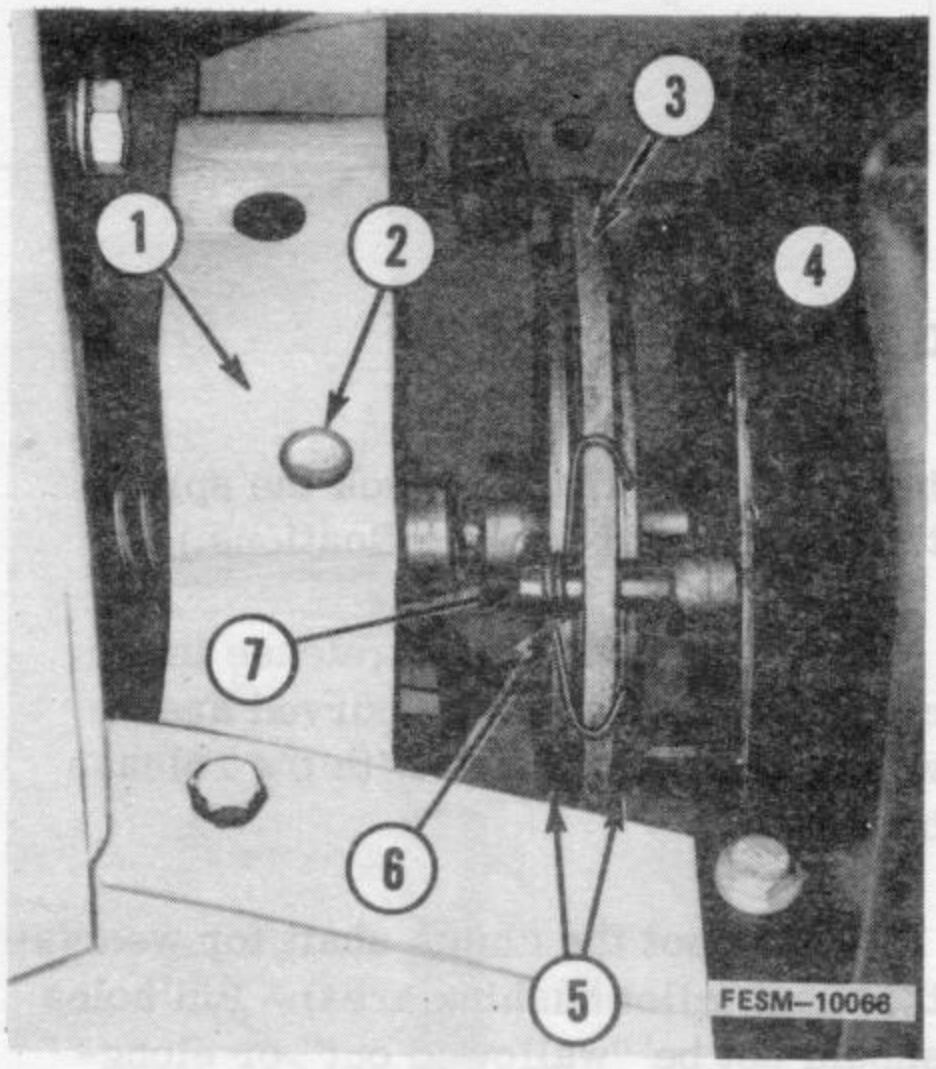

1. Hanger assembly
2. Pivot pin
3. Driving disc
4. Drive plate
5. Pressure plate assembly
6. Drive disc spring
7. Drive pin

5a. Remove the pivot pin and the hanger assembly.

NOTE: On these models one of the drive pins is longer than the other two. This longer pin should have the drive disc spring installed on it as shown.

6. Slide the clutch shaft to the side and out of the pressure plate assembly and driving disc.

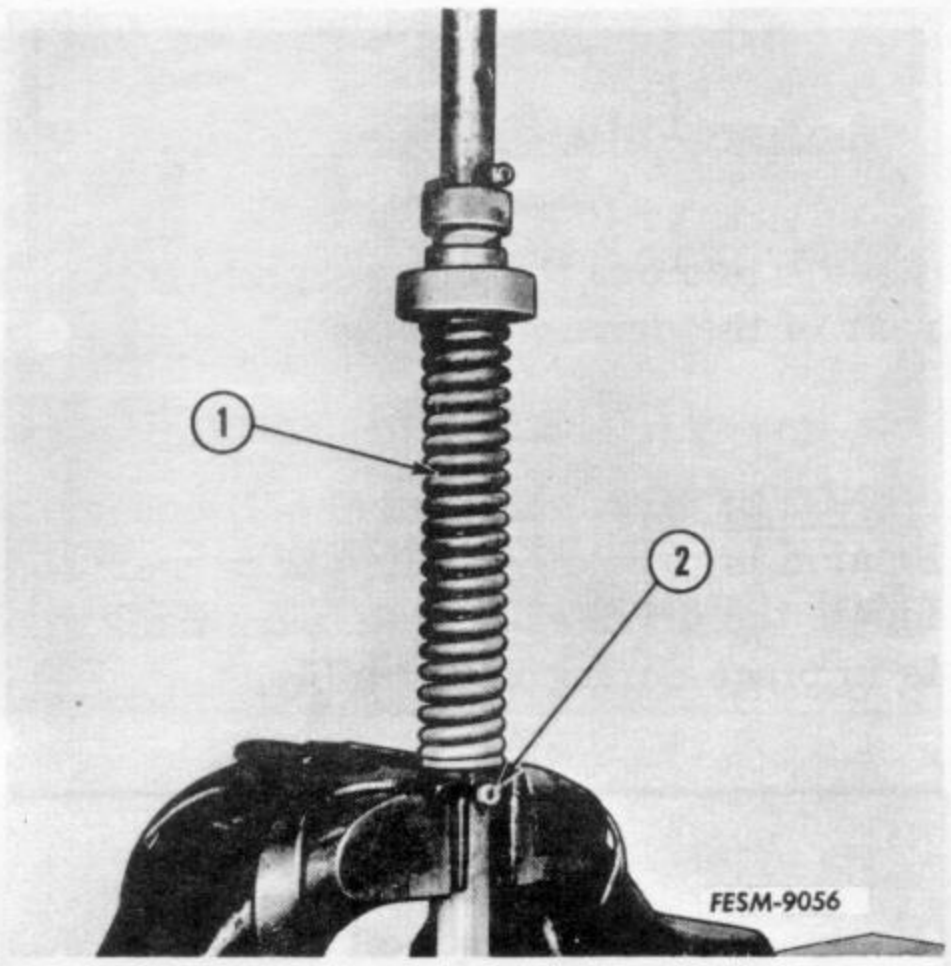

1. Loading spring
2. Coiled pin

7. Using a vise equipped with brass jaws, clamp the clutch shaft snug and tap the shaft down enough to compress the loading spring slightly. Remove the coiled spring pin.

CAUTION: Slowly release the vise allowing the spring to extend as the shaft slips through the vise jaws.

Inspection and Repair

1. Inspect the clutch driving disc for wear from pressure plates and for elongated holes from the driving plate pins. Disc must be free of grease and oil.

2. Inspect both pressure plates for warping and wear on their contact faces.

3. Inspect the slotted hub of the rear pressure plate for pin wear. If the slots are cupped from pin wear the plate must be replaced.

4. Inspect the teaser spring ends. Ends should be rounded to prevent gouging the clutch shaft. Check the spring tension. (Refer to Specifications.)

5. Inspect the loading spring ends. Ends should be rounded to prevent gouging the clutch shaft. Check the spring tension. (Refer to Specifications.)

6. Inspect the clutch release lever channel for wear on the curved area where contact is made with the release bearing.

7. Inspect the clutch shaft for wear at the front (pilot bushing area). Pin holes should not be "wallowed out" or elongated.

8. Release bearing area and teaser spring area should be free from scoring.

9. Clutch shaft coupling pin holes should not be "wallowed out" or elongated.

Reassembly

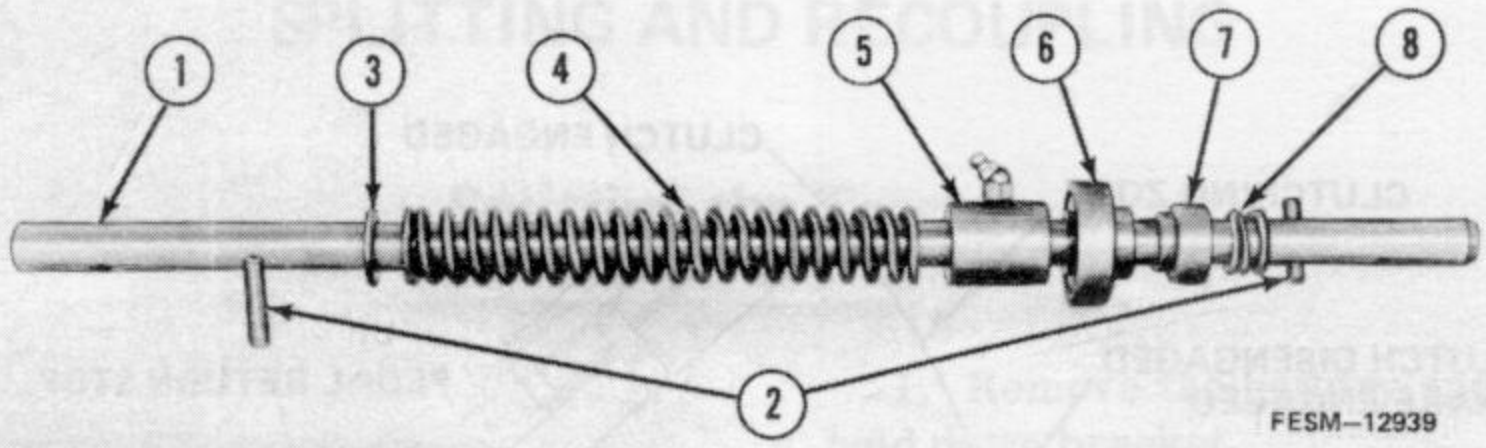

1. Clutch shaft
2. Coiled pin
3. Washer
4. Loading spring
5. Bushing
6. Throw out bearing
7. Spring spacer
8. Teaser spring

1. Assemble the front coiled spring pin, teaser spring, spring spacer, throwout bearing, bushing, loading spring and washer onto the clutch shaft.

NOTE: The bushing shown with the lubrication fitting is used on models with S/N 612808 and above.

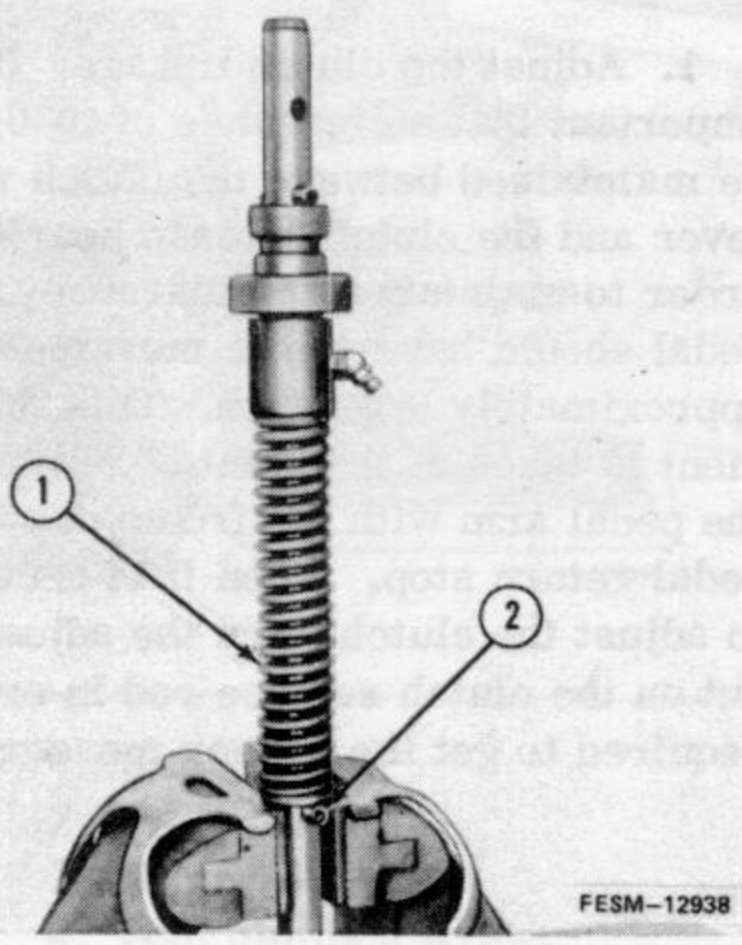

1. Loading spring
2. Coiled pin

2. Using a vise equipped with brass jaws, clamp the clutch shaft snug. Tap the shaft down enough to compress the loading spring and install the rear coiled spring pin.

3. Continue reassembling the clutch by reversing the disassembly procedure.

4. On Cub Cadet S/N 612808 and above use only powder bushing grease when packing the clutch drive plate bushing and when coating the clutch shaft.

5. Adjust the clutch.

Adjustment

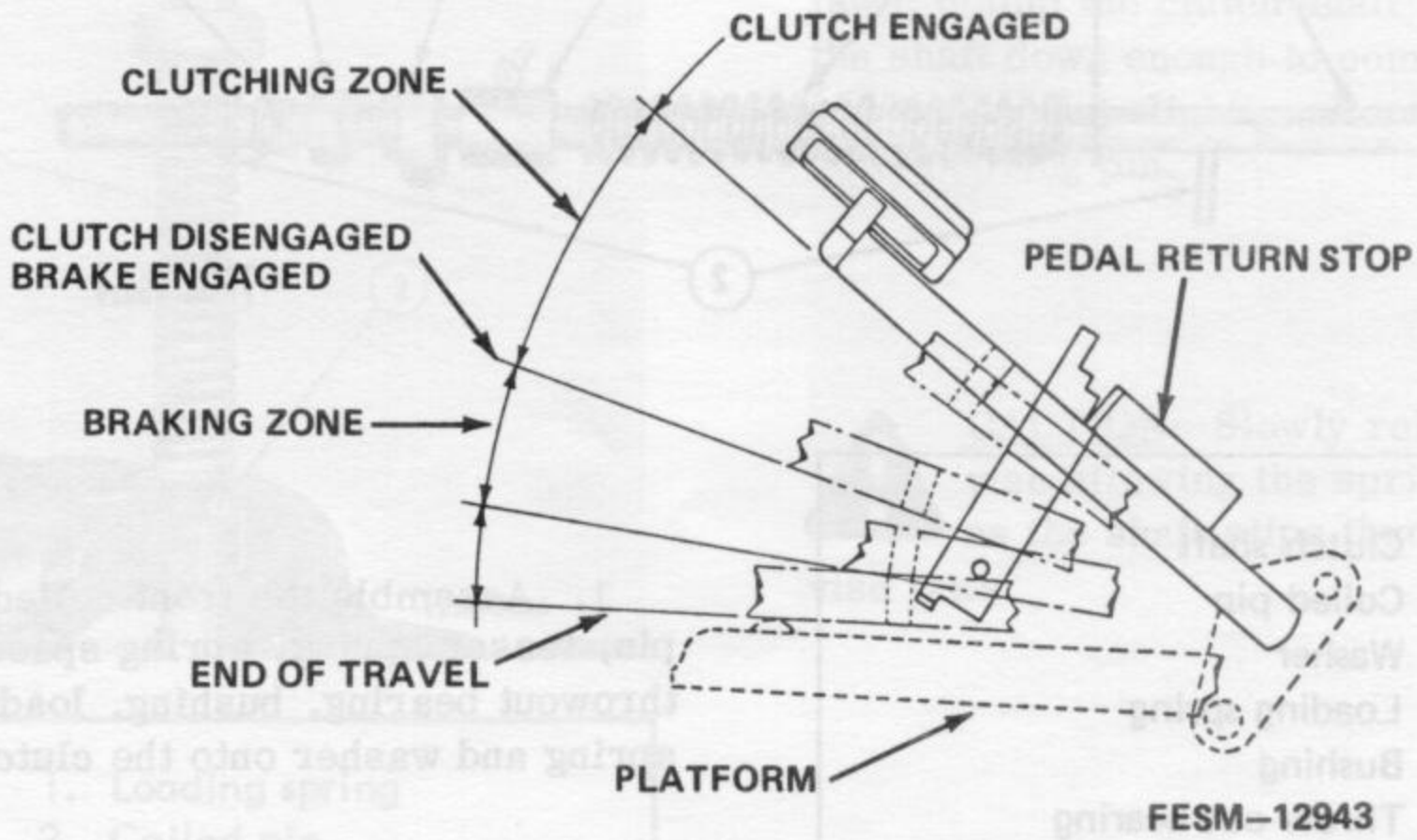

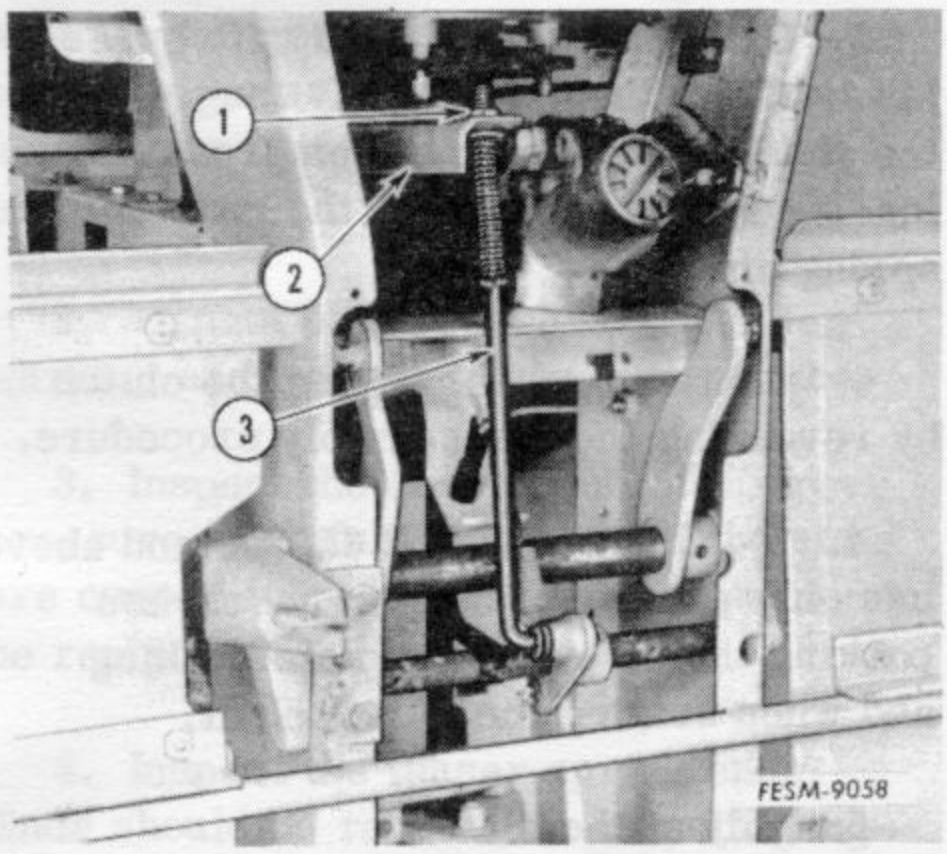

1. Adjusting nut
2. Clutch release lever
3. Release rod

1. Adjust the clutch linkage. It is important that a clearance of .050-inch be maintained between the clutch release lever and the clutch release bearing. In order to maintain this clearance, the pedal should have a free movement of approximately 9/32-inch. This measurement is taken at the point of contact of the pedal arm with the front edge of the pedal return stop. When it is necessary to adjust the clutch, turn the adjusting nut on the clutch release rod in or out as required to get the proper measurements.

SPLITTING AND RECOUPLING

Splitting the Tractor

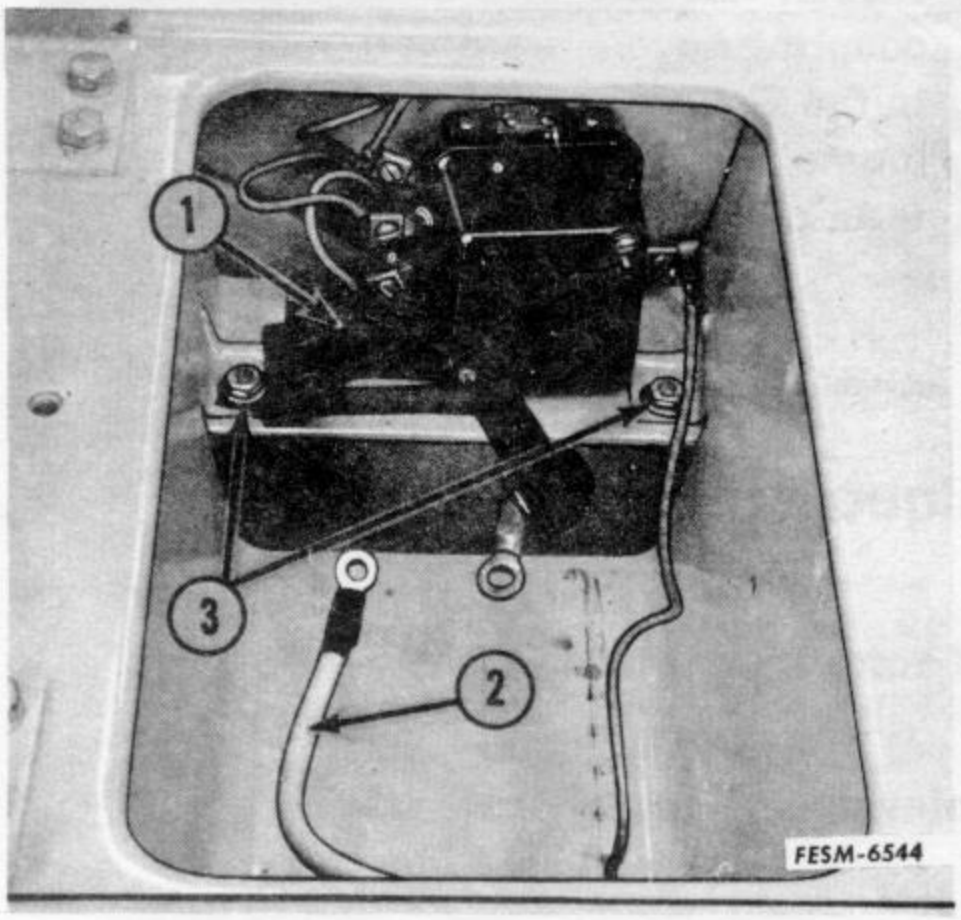

1. Remove the battery and battery hold down bracket.

2. Remove the rear fender to frame bolts and the battery ground wire.

3. Disconnect the wire harness from the voltage regulator and mounting clip, if equipped.

1. Wire harness
2. Battery ground wire
3. Fender to frame bolts

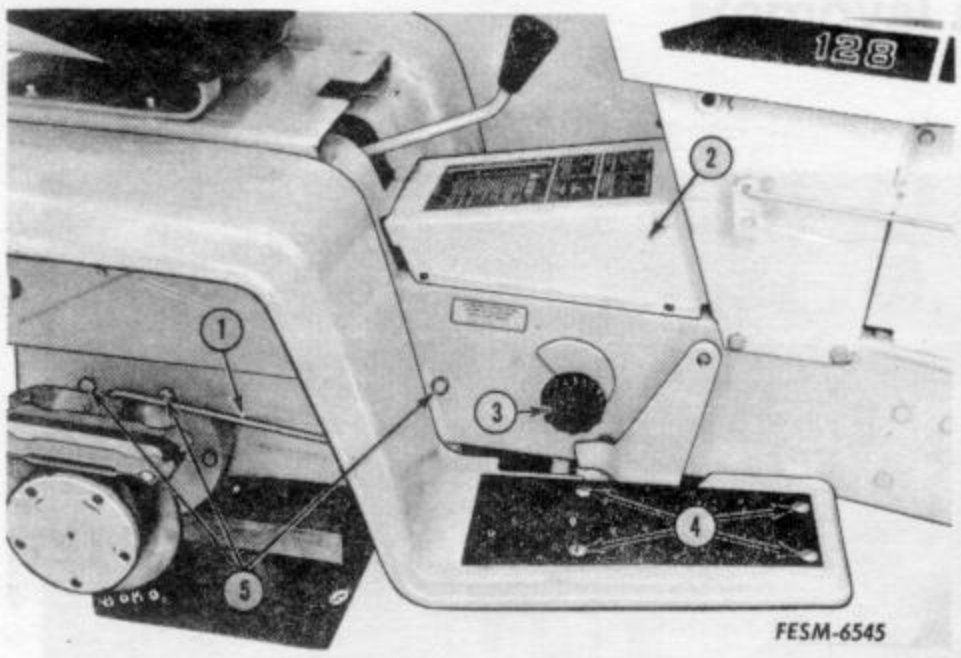

4. Remove the mounting screws from the foot platforms and the implement height adjustment knob.

5. Remove the frame cover.

6. Remove the fender assembly.

7. Disconnect the rear brake rods from the caliper assemblies and the brake lever rod from the cross shaft.

1. Brake rod
2. Frame cover
3. Implement knob
4. Foot platform screws
5. Frame mounting bolts

8. Disconnect the rear coupling.

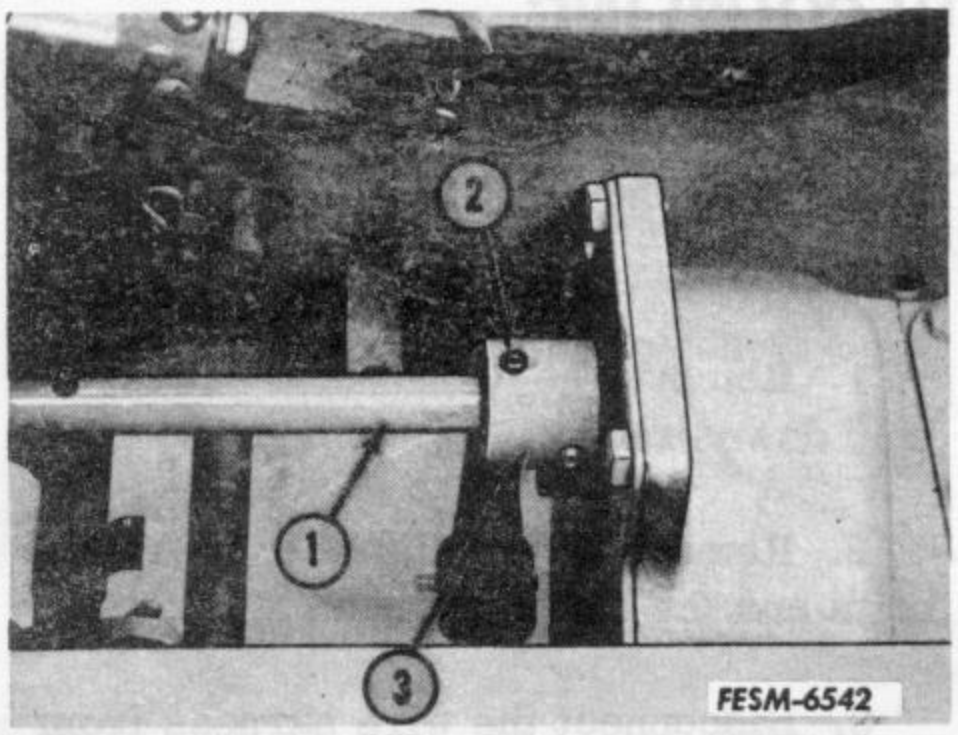

1. Drive shaft
2. Roll pin
3. Rear coupling

NOTE: Models with a flexible rear coupling have a steel ball spacer located in the flex drive coupling to properly locate the drive shaft. Be sure the ball is in place during reassembly.

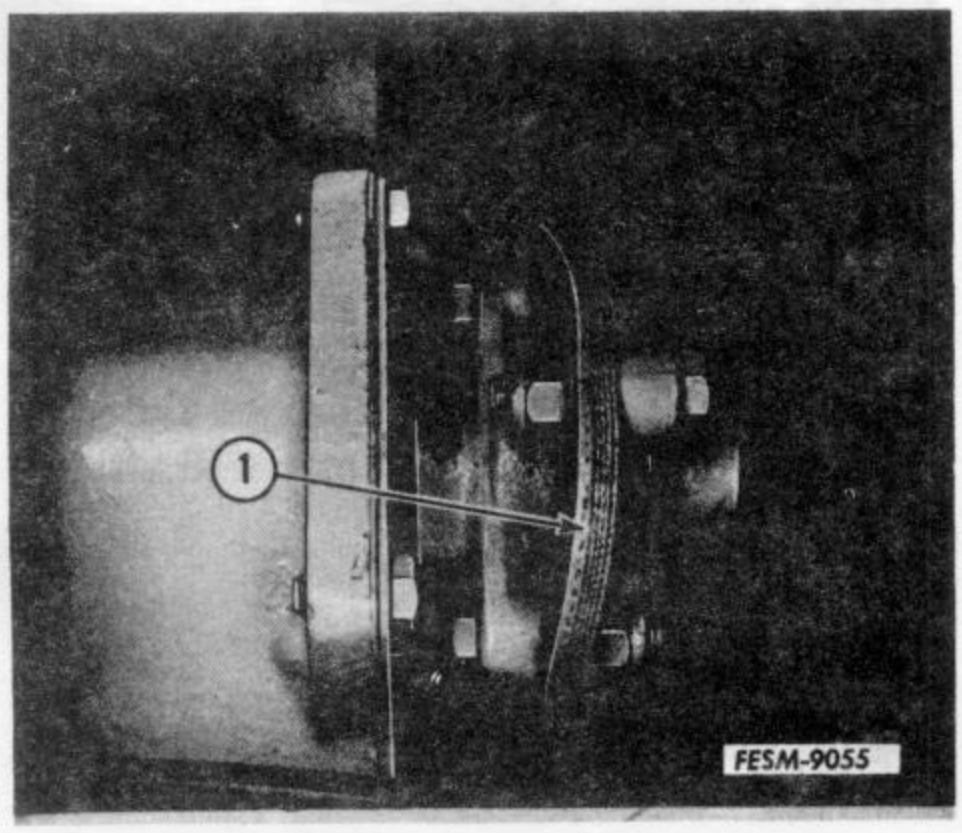

1. Rear flex coupling

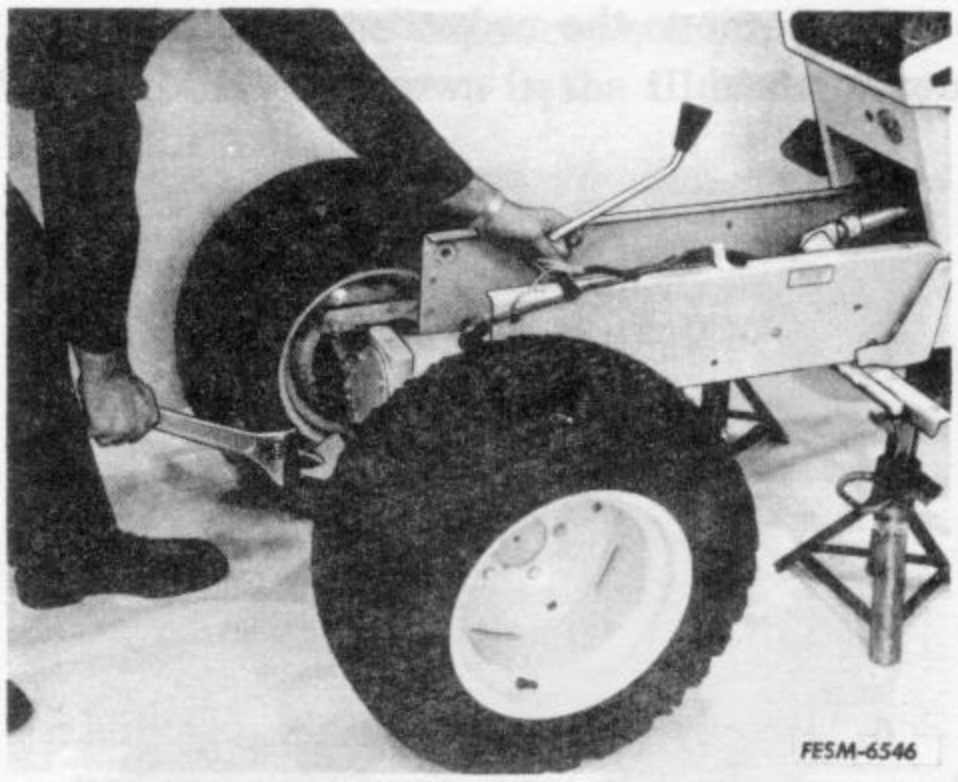

9. Support the frame of the tractor, remove the frame mounting bolts and roll the rear end out of the frame. Tractors equipped with a three point hitch attachment will require the removal of the lift lever. Before rolling the rear end out, disconnect the lift bar from the lift lever and raise the frame high enough to remove the lift lever and shaft.

Recoupling the Tractor

1. Recouple the tractor by reversing the splitting operation.

2. Check oil level of the rear frame and fill to proper level with IH Hy-Tran or equivalent.

REDUCTION DRIVE

Removal and Disassembly

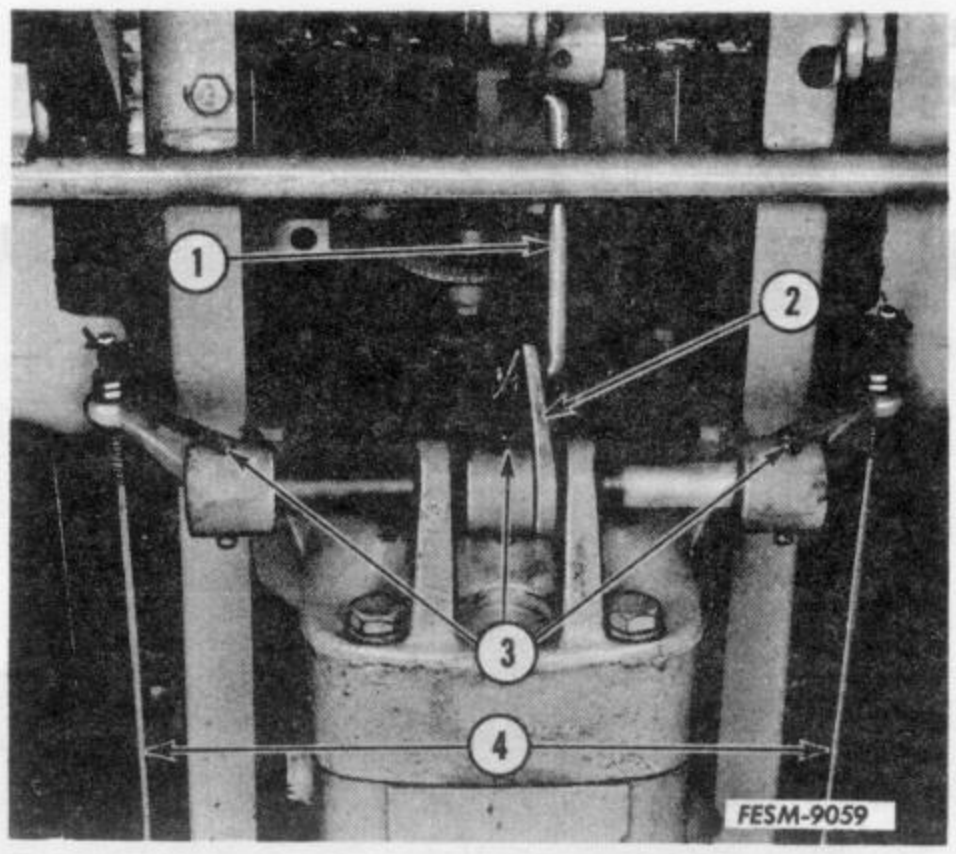

1. Brake rod	3. Coiled pins
2. Brake lever	4. Brake arms

1. Split the tractor.

2. Remove the transmission drain plug and allow the lubricant to drain completely; then replace the plug.

3. Remove the creeper assembly (if tractor is so equipped).

4. Remove the three coiled spring pins to disconnect the brake arms and brake lever from the reduction housing.

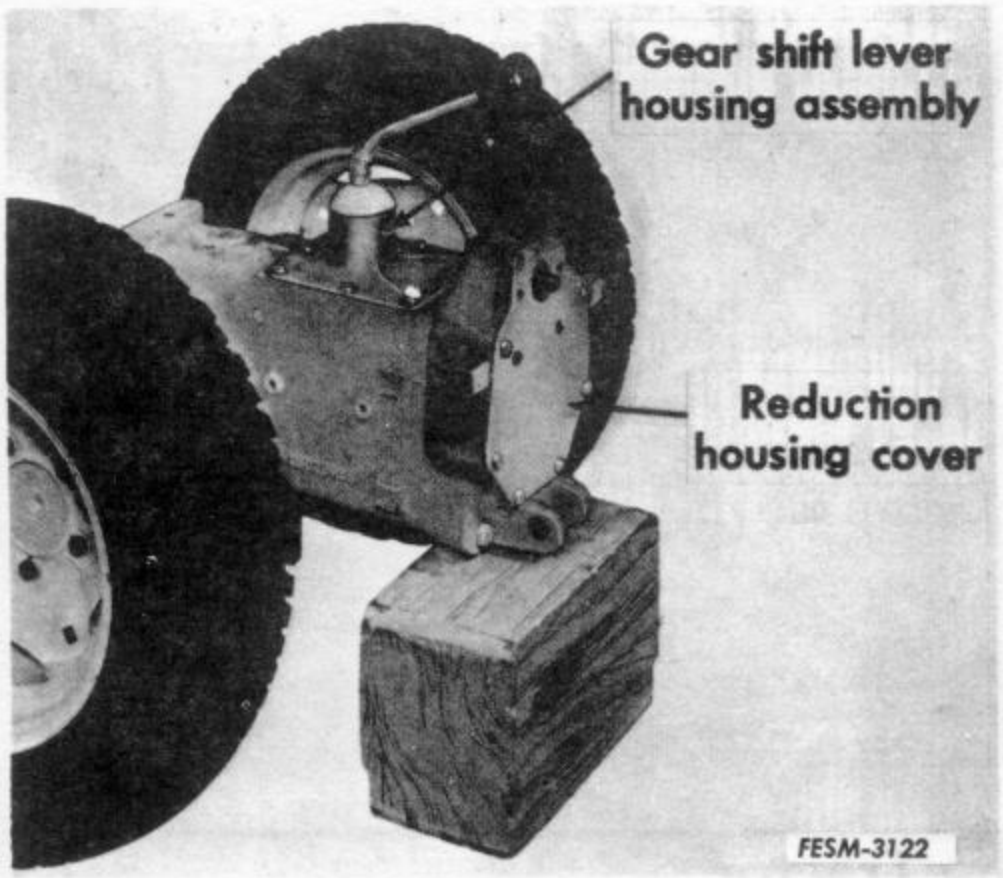

5. Remove the reduction housing cover plate.

6. Remove the reduction driven gear by removing the capscrew, lock washer and driven gear retainer.

NOTE: It may be more convenient to pull the reduction drive shaft, seal and bearing (see step 11) before removing the reduction gear from the housing. Clearance between the gear and capscrew bosses is restricted on some tractors.

7. Remove the spacer from the input shaft.

8. Remove the capscrews securing the transmission input shaft bearing retainer to the transmission and remove the retainer.

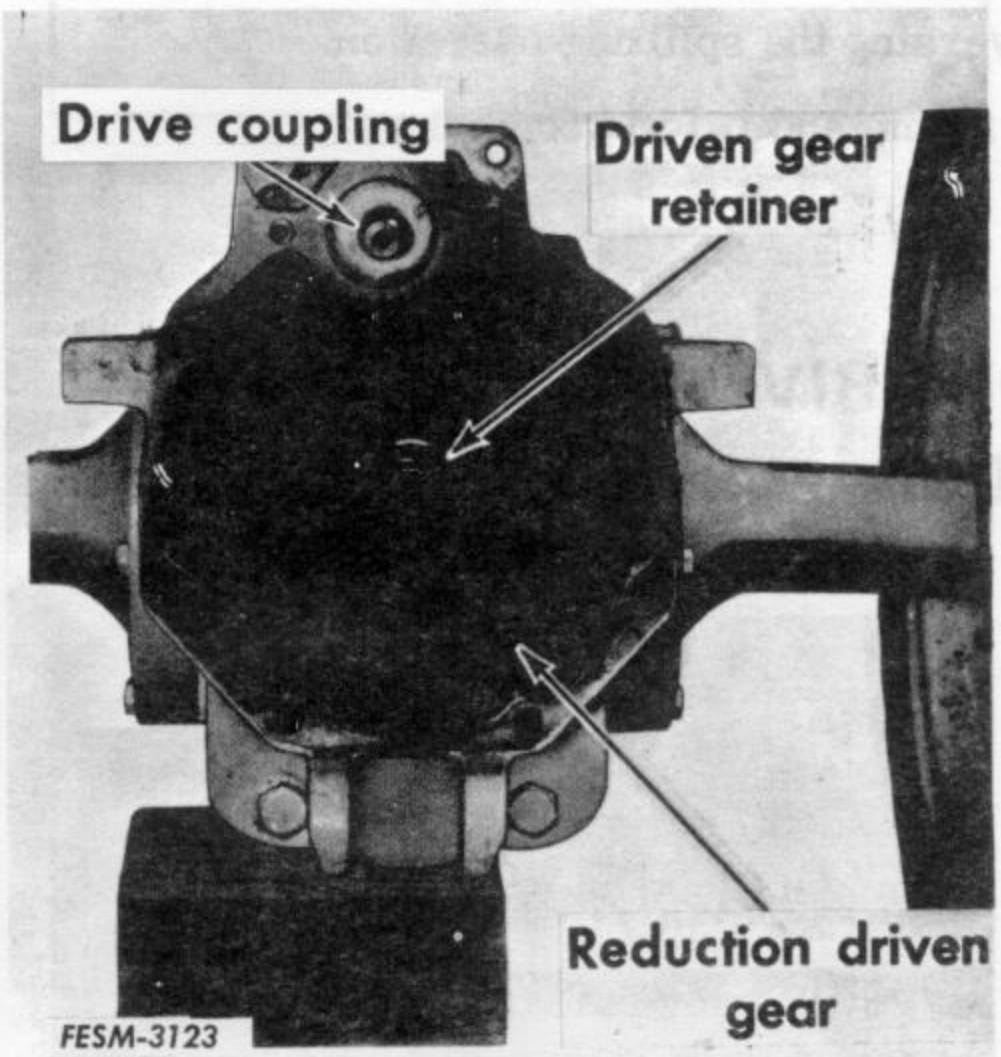

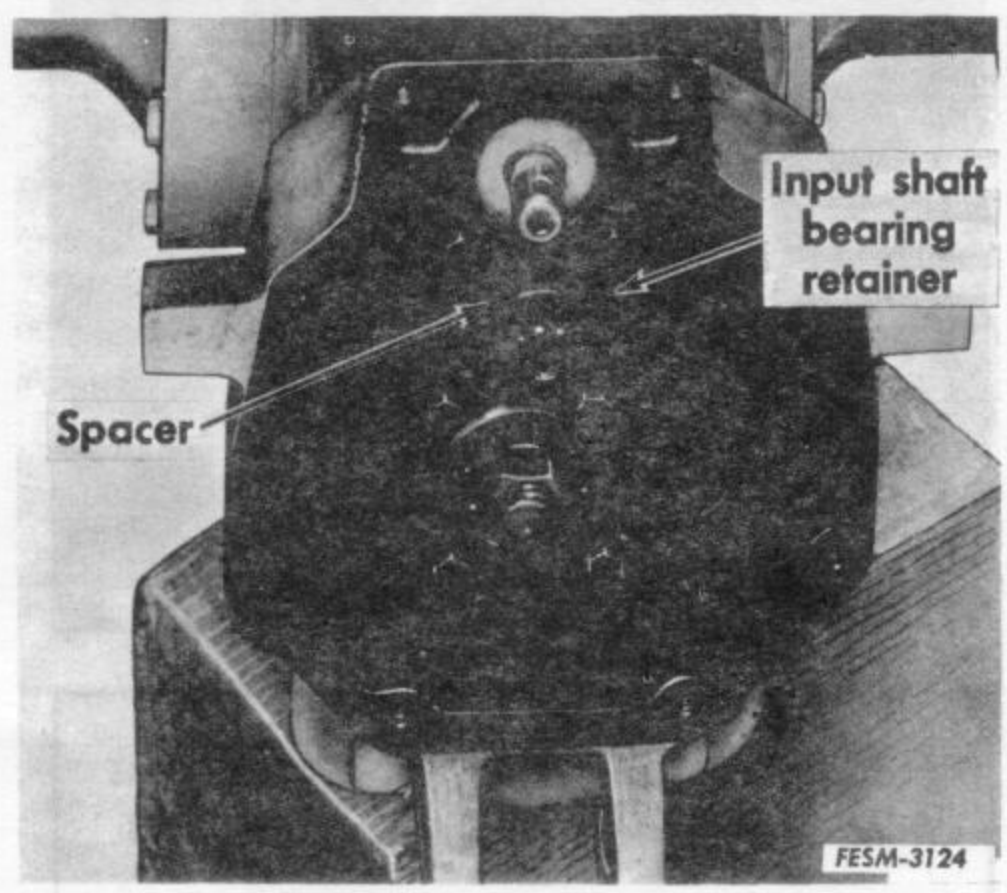

9. Remove the capscrews from holes "A" and "B" as shown in the illustration.

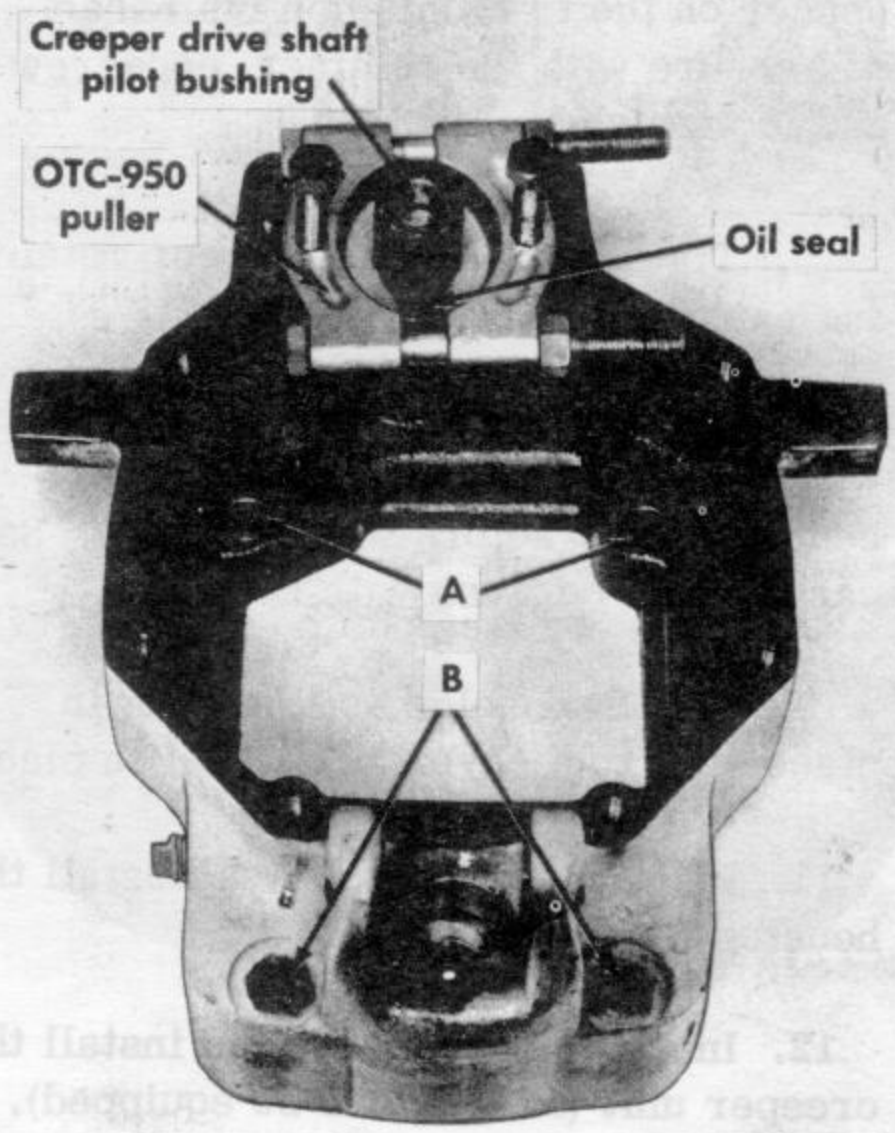

NOTE: Soft copper sealing washers are used under the "B" capscrew heads.

10. Move the reduction housing forward and away from the transmission housing.

11. Pull the reduction drive shaft, seal and bearing from the reduction housing if it was not removed in step 6.

12. Support the drive shaft splined coupling and drive out the coiled spring pin.

NOTE: The splined coupling is used only on tractors equipped with creeper attachment.

13. Press the reduction drive shaft from the ball bearing.

14. Press the needle bearing rearward from the housing.

Inspection and Repair

1. Inspect the drive shaft for wear on the gear teeth, needle bearing area, oil seal contact area and drive pin hole.

2. Inspect the reduction gear teeth for wear or chipping and the fit of the gear on the transmission shaft.

3. On tractors with creeper, inspect wear of pilot bushing for creeper drive shaft.

4. Inspect needle bearings and ball bearings for wear, pitting and roughness of operation.

5. Thoroughly clean the reduction housings, bearings and gears.

Reassembly and Installation

1. Install a new gasket to the front of the transmission case.

2. Press the needle bearing into the reduction housing from the rear. The rear end of the bearing should be flush with the housing.

3. Press the ball bearing onto the reduction drive shaft.

4. Lubricate the lip of a new oil seal and install the seal onto the shaft. Be careful when sliding the seal lip over the pin hole in the shaft.

5. Install the splined coupling and coiled pin (if tractor is equipped with a creeper). Coiled pin ends must be even with or below the spline root to avoid interference when shifting the creeper unit.

6. Install the reduction housing to the transmission case. Be sure the gasket and dowels are in place.

7. Install new copper sealing washers on the two lower capscrews. Tighten the capscrews to 80 ft. lbs.

8. Install the reduction gear and spacer on the transmission mainshaft and secure with the retainer, capscrew and lock washer.

9. Tighten the reduction gear retaining capscrew to 55 ft. lbs.

10. Install the reduction drive shaft with ball bearings, seal and splined coupling (on tractors with creeper). Seal case should be flush with housing.

NOTE: Seal holds ball bearing in place and front cover holds seal in place.

11. Install a new gasket and install the housing front cover.

12. Install a new gasket and install the creeper unit (on tractors so equipped).

13. Install the brake lever and brake arms on the pivot shaft and reduction housing.

14. Recouple the tractor.

15. Fill the transmission and creeper to proper level with IH Hy-Tran or its equivalent.

Transmission and Differential

Complete service of the transmission requires splitting of the tractor, removal of the reduction drive (and creeper if so equipped), rear axles, carriers and the differential. The differential can be removed and replaced without disassembling the transmission, however, the transmission countershaft should be removed when checking preload of the differential carrier bearings. The transmission and differential are therefore covered together.

Removal and Disassembly (Differential)

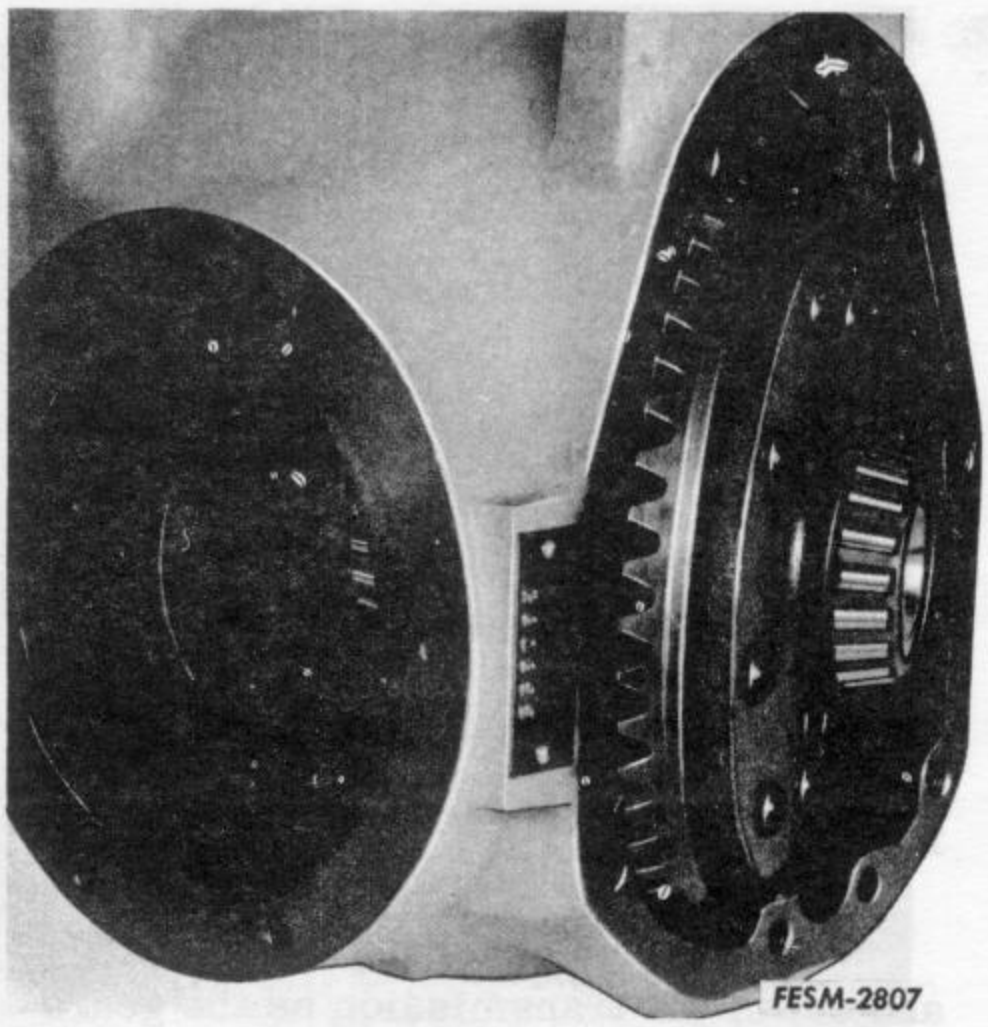

1. Drain the lubricant.

2. Split the tractor.

3. Remove the reduction drive.

4. Remove the rear axles and their carriers.

5. Remove the differential carrier bearing cage and shims from each side. Keep the shims with each cage and identified for each side.

6. Turn the differential into the position shown and remove it from the transmission case. If the assembly will not clear the side of the transmission case, it will be necessary to remove one of the differential carrier bearings.

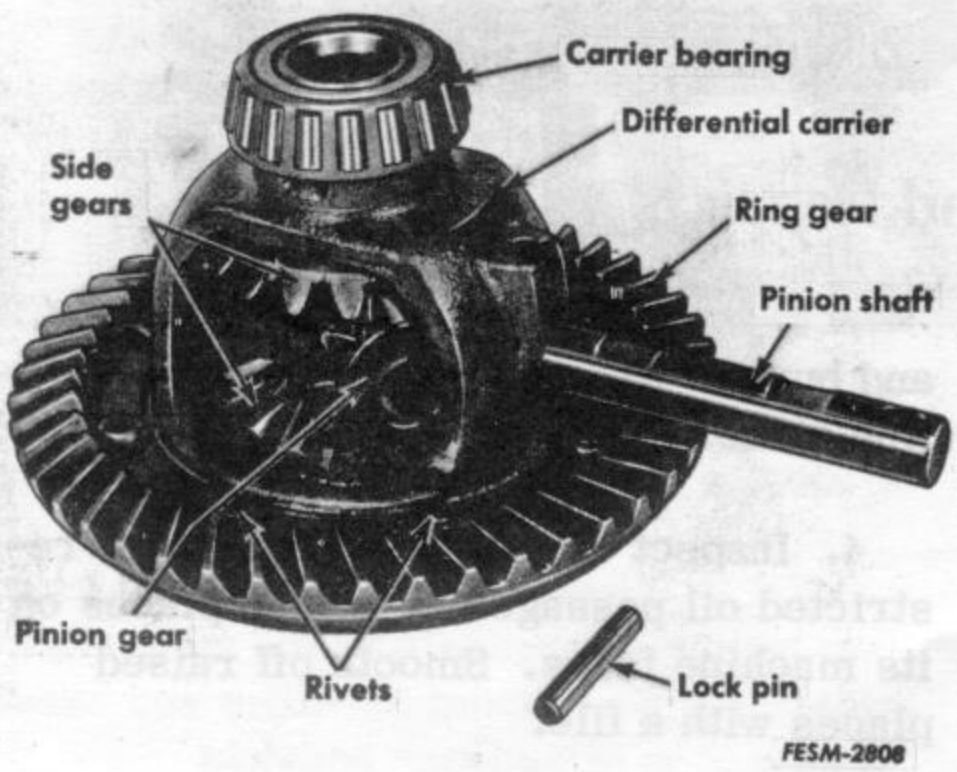

7. Drive out the pinion shaft lock pin.

8. Remove the pinion shaft.

9. Remove the pinion gears and side gears.

10. If the drive gear requires separate replacement, press out the eight retaining rivets.

11. Remove the carrier bearing cones from the differential carrier if they are to be replaced.

12. Remove the bearing cups from each cage if replacement is necessary.

Disassembly (Transmission)

1. Remove the differential.

2. Remove the gear shift lever and cover assembly.

Shift the transmission into two gear speeds to lock the transmission then remove the nut from the countershaft.

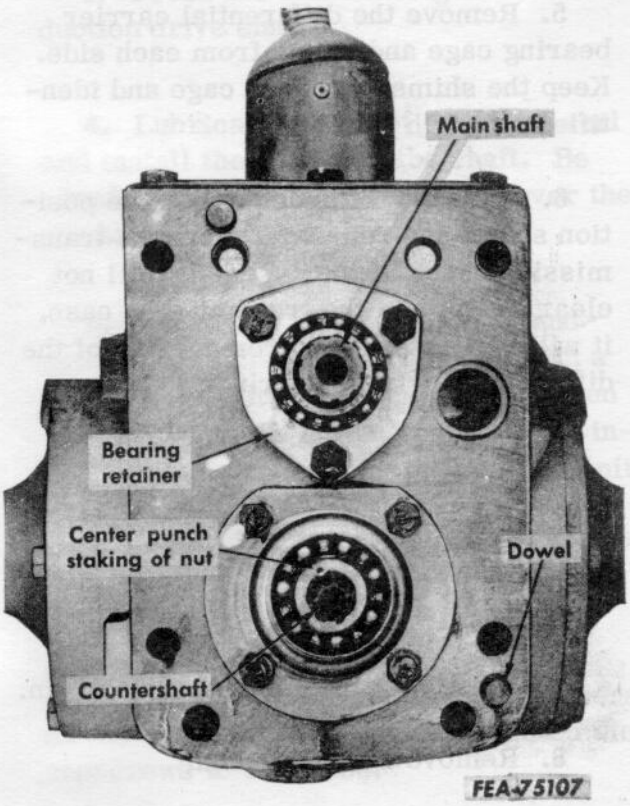

3. Remove the shifter fork set screws.

CAUTION: Cover the gearshift poppet ball hole to prevent the ball and spring from flying out as the rods are removed.

Drive the shifter rods forward and out of the transmission.

4. Remove the capscrews from the mainshaft front bearing retainer.

5. Pull the mainshaft forward and out of the transmission as the gears are removed.

6. Push the countershaft rearward and out of the transmission as the gears and spacers are removed. Note the sequence of spacers and gears for reassembly. See Specifications for spacer lengths.

7. Pull the mainshaft needle bearing from the housing.

8. Remove the reverse idler shaft and gear.

9. Remove the countershaft front bearing, retainer and shims.

Inspection and Repair

1. Wash all parts in cleaning solvent and dry with compressed air. Do not spin bearings.

2. Check all bearings for looseness, wear, roughness, pitting and scoring.

3. Check gears and shafts for wear and burrs. Remove any burrs with a fine stone.

4. Inspect the housing for cracks, restricted oil passages or raised places on its machine faces. Smooth off raised places with a file.

Reassembly

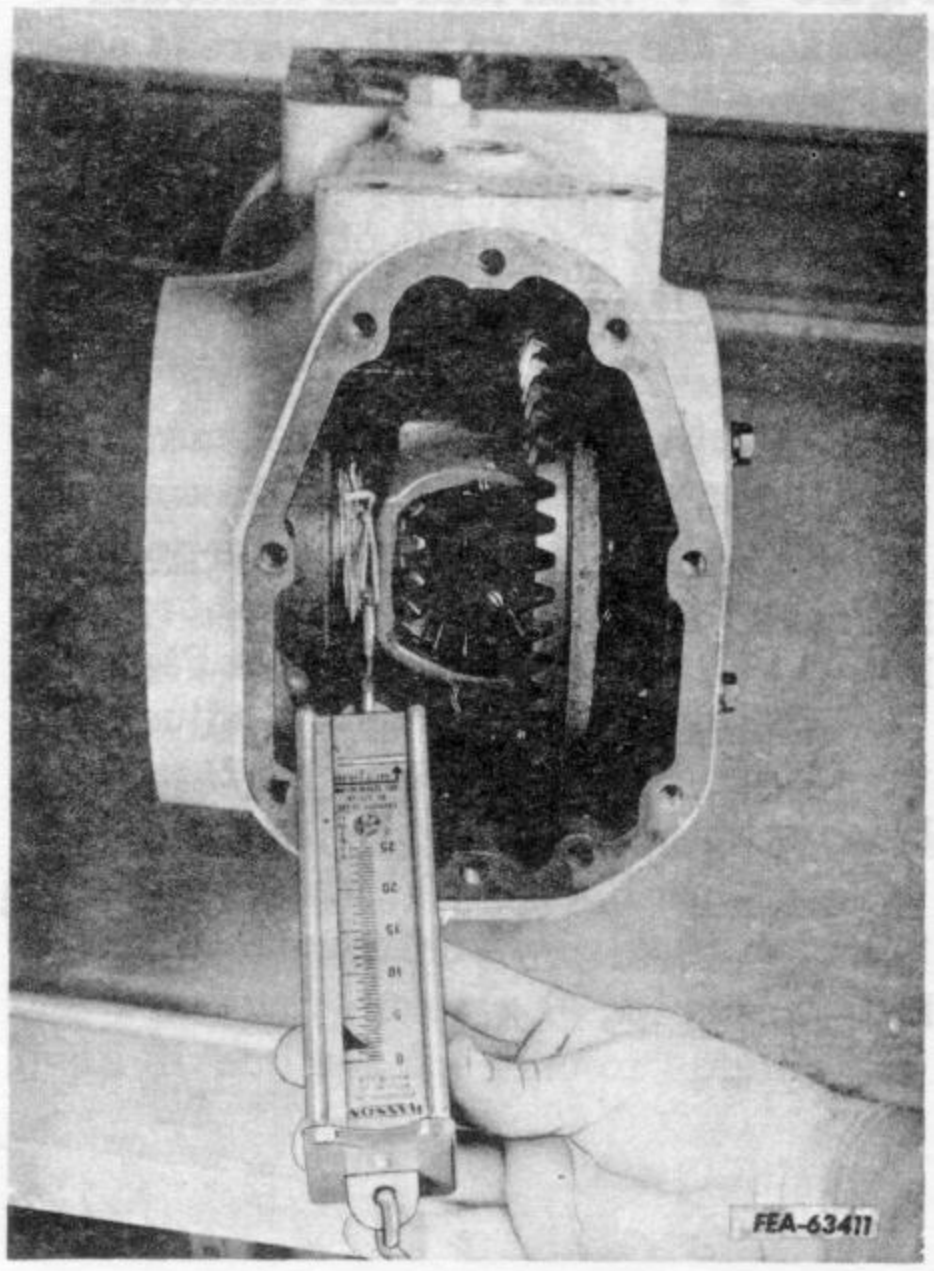

Reassembly is basically the reverse of disassembly; however, particular attention should be given to the following steps.

1. Be sure all bearings are thoroughly lubricated.

2. The transmission mainshaft needle bearing must be installed with its oil hole aligned with the oil hole in the housing.

3. Assemble the differential, carrier bearings, cages and shims. Check bearing preload and adjust as necessary before replacing the transmission countershaft. Install or remove shims as necessary. Preload is correct when a steady pull of one to eight pounds is necessary to rotate the differential assembly.

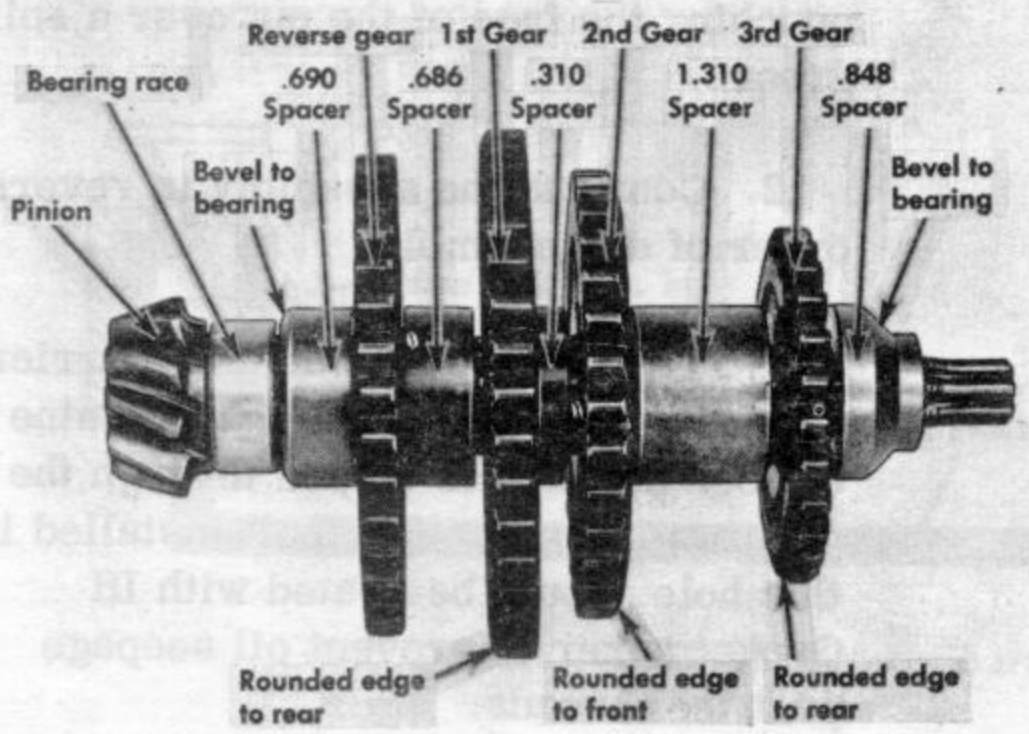

4. Remove the differential assembly, keep the shims with the cages then install the transmission countershaft, bearings, gears, spacers, front bearing retainer, shims and nut. Tighten the nut to 85 ft. lbs. Tighten retainer capscrews to 20 ft. lbs.

5. Install the differential assembly, keeping the preload shim pack correct as previously established. Drive gear must be on the right with teeth facing left.

6. Check the backlash between the drive gear and bevel pinion and the gear teeth bearing pattern as follows.

7. Apply a thin coat of red lead or prussian blue to the bevel pinion teeth faces, then rotate the gears by hand and observe the bearing pattern.

Some deflection will occur under load. Allowance is made in gear design to prevent concentration of load on tooth edges.

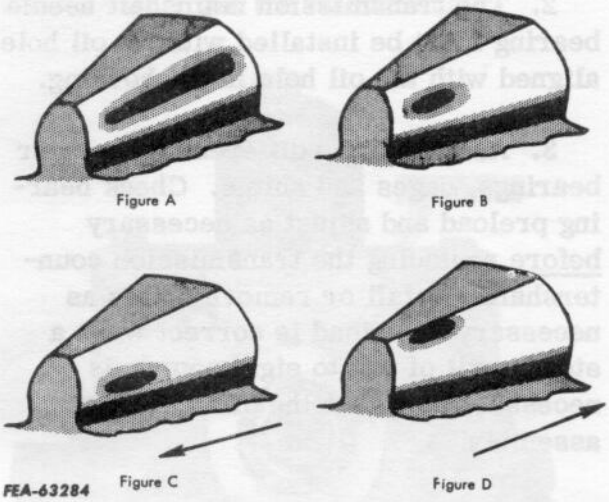

Tooth bearing pattern.

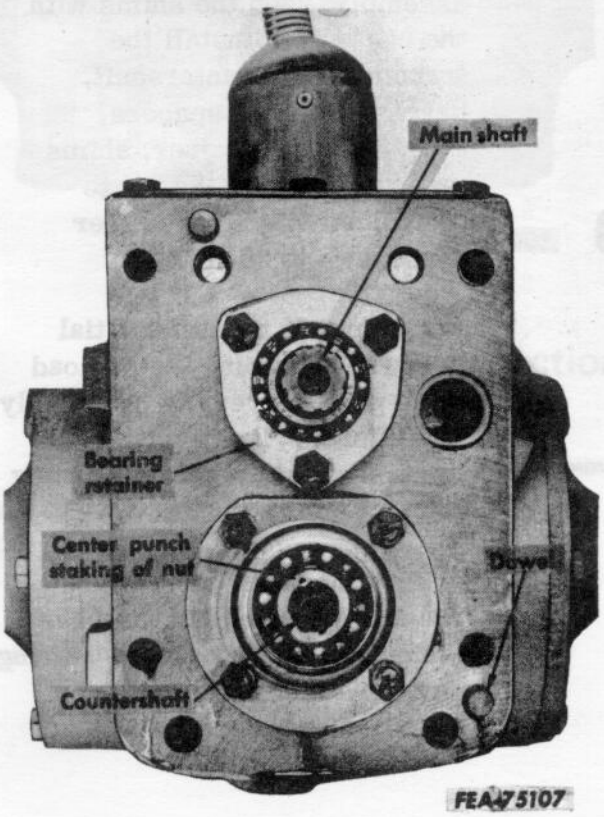

8. Hand testing and very light loads should provide a pattern as shown in Figure "B". When load and deflection increases the pattern will progress as in Figure "A".

9. The desirable (no load) pattern in Figure "B" is the result of adjusting the drive gear lateral position to the specified range of .003" to .005" backlash.

10. Tooth bearing position from the root to the crown of the tooth is controlled by lateral position of the bevel pinion. If low tooth bearing on bevel pinion is indicated (as shown in Figure "C") the bevel pinion must be adjusted toward the drive gear. If high tooth bearing on the bevel pinion is indicated (as shown in Figure "D") the bevel pinion must be adjusted away from the drive gear.

11. Stake the countershaft nut by center-punching the face of the nut over a spline groove.

12. Continue the assembly in reverse order of disassembly.

NOTE: The right side axle carrier mounting bolt hole located at the nine o'clock position is tapped through the differential case. The bolt installed in this hole should be coated with IH Gasketmaker to prevent oil seepage past the threads.

13. Fill housing to proper level with specified lubricant.

NOTE: Creeper attachment has its own lubricant separate of the transmission. Fill creeper at breather and check at side plug in creeper housing.

HYDROSTATIC DRIVE

Principles of Hydrostatics

This hydrostatic drive can be defined as an energy transfer system composed of a variable displacement pump and a fixed displacement motor for the transmission of power by fluid under pressure and in a contained vessel. The pump converts mechanical energy into hydraulic energy, and the motor converts hydraulic energy into mechanical energy.

A simple hydrostatic drive is shown. A 10 lb. force on "pump" piston (A) creates 10 psi pressure on the fluid connecting the "pump" and "motor". Since the fluid under pressure exerts 10 psi equally and in all directions, the "motor" piston (B) moves up with a force of 10 lbs. since its area is 1 square inch. If the "pump" piston (A) is moved 1 inch, the "motor" piston (B) will also move 1 inch since its area is the same area as the pump piston.

This illustrates the basic principles in their simplest form. Modern hydrostatic transmission consist of multiple piston pumps and multiple piston motors arranged in a manner so as to continuously perform the transfer of energy shown.

The piston pump is designed with a rotating shaft which imparts a reciprocating motion to its pistons, pumping

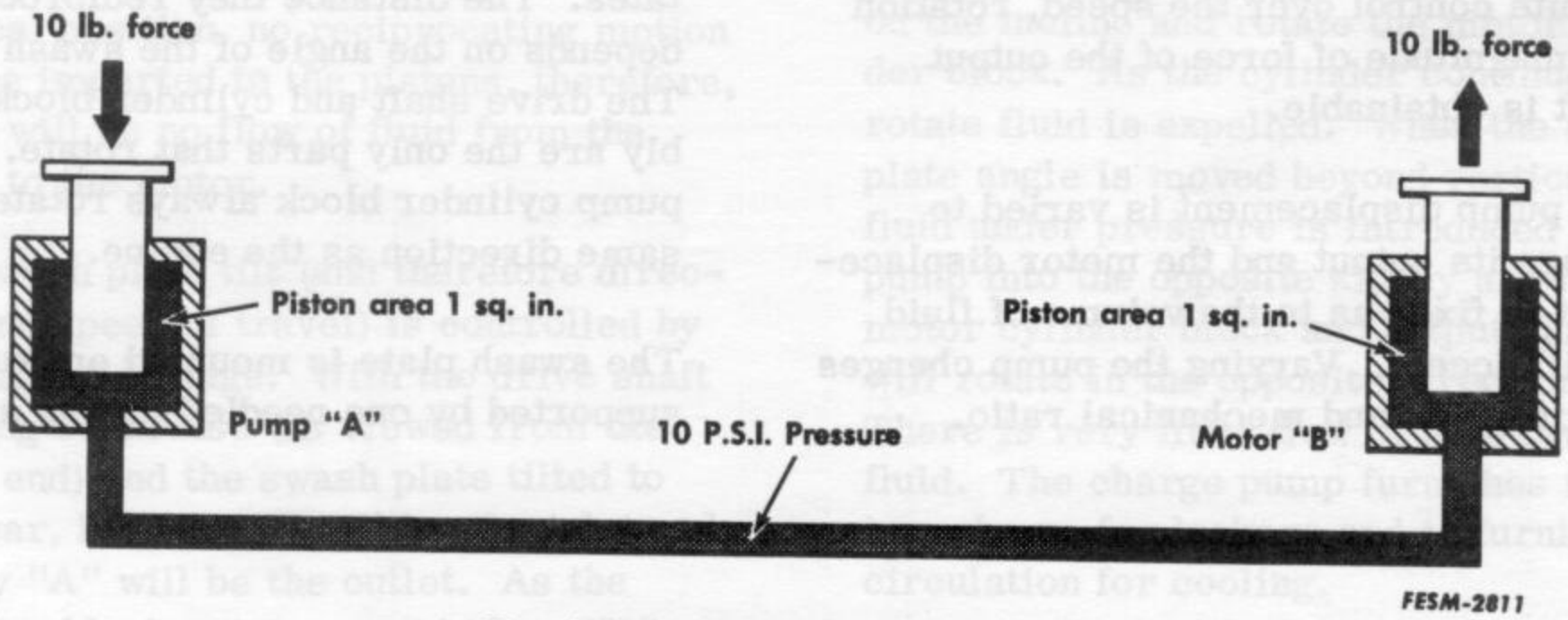

Simple hydrostatic transmission.

fluid in a continuous stream to a motor which accepts the fluid under pressure in its pistons, which in turn imparts a rotating motion to the motor shaft.

In a hydrostatic drive, there are only three basic items to control. These three items are:

1. Rate of fluid flow.

2. Direction of fluid flow.

3. Fluid pressure.

Since infinite control of these three basic items is possible, it therefore follows that a hydrostatic drive is infinitely controllable. Infinite control over the rate of fluid flow results in control of the output speed. Infinite control over the direction of fluid flow results in control of the rotation of the output shaft. Control over the fluid pressure results in control of the magnitude of force applied to the output shaft. Therefore, infinite control over the speed, rotation and magnitude of force of the output shaft is obtainable.

The pump displacement is varied to change its output and the motor displacement is fixed as to the volume of fluid it will accept. Varying the pump changes motor speed and mechanical ratio.

How It Works

(Refer to foldout at back of manual)

Variable Displacement Pump and Fixed Motor

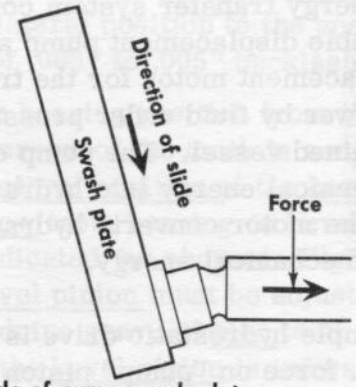

As angle of pump swash plate changes volume of displacement of pistons changes FESM-1914

The pump drive shaft is coupled to the engine drive shaft. Nine (9) pistons are located in the cylinder block and they reciprocate in the cylinder block as it rotates. The distance they reciprocate depends on the angle of the swash plate. The drive shaft and cylinder block assembly are the only parts that rotate. The pump cylinder block always rotates the same direction as the engine.

The swash plate is mounted on trunnions supported by one needle bearing and one

bushing mounted in the transmission case. The swash plate does not rotate but merely tilts back and forth from a vertical plane. The vertical plane is a "zero output" position as the pistons are not reciprocating. The drive shaft drives through a center hole in the swash plate and does not touch it. The center section which has the hydraulic porting, referred to as kidneys, allowing fluid to flow between the pump and motor is bolted to the transmission case. "Kidneys" which are open passages from the pump to the motor through the center section are the only connection between them.

By reversing the tilt of the pump swash plate the flow through the inlet and outlet kidneys can be reversed. The pump swash plate can be tilted 15 degrees from the vertical position for forward and 7 degrees for reverse.

The output shaft rotation depends on the pump swash plate tilting position from the vertical. With the swash plate in the vertical position, no reciprocating motion will be imparted to the pistons, therefore, there will be no flow of fluid from the pump to the motor.

The swash plate tilt (and therefore direction and speed of travel) is controlled by mechanical linkage. With the drive shaft rotating clockwise (as viewed from the drive end) and the swash plate tilted to the rear, kidney "B" will be the inlet and kidney "A" will be the outlet. As the cylinder block rotates past kidney "B" fluid is drawn into the piston bores, then as rotation continues fluid is expelled into kidney "A" by the pistons. The distance that the pistons reciprocate depends on the angle of the swash plate; this determines the displacement per revolution of the pump.

The greater the angle, the greater the displacement; therefore, the more flow of fluid from the pump. Now it can be seen as the swash plate angle is varied so it will vary the flow from the pump.

When the pump swash plate is tilted to the front, the flow reverses and kidney "A" becomes the inlet and kidney "B" becomes the outlet -- the flow of fluid has been reversed while the drive shaft continues to rotate in the same direction.

The motor used is an axial piston fixed displacement motor of the same design as the pump. A splined output shaft is splined to the cylinder block and is driven by it. As fluid under pressure is introduced from the pump, force is exerted against the pistons in the motor cylinder block. Since the swash plate of the motor is inclined, the pistons slide on the incline and rotate the motor cylinder block. As the cylinder continues to rotate fluid is expelled. When the swash plate angle is moved beyond vertical, fluid under pressure is introduced by the pump into the opposite kidney and the motor cylinder block and output shaft will rotate in the opposite direction. There is very little flow of high pressure fluid. The charge pump furnishes fluid to make up for leakage and to furnish circulation for cooling.

The only connection between the pump and motor is the hydraulic porting in the center section referred to above as kidneys.

General Information

Refer to this page for additional reference to the parts described during service procedures in this manual.

Many of the component parts have highly polished machined surfaces. Extreme care must be taken to prevent damage during disassembly and reassembly.

Coat hands with clean Hy-Tran before handling the polished surfaces of the parts in order to minimize rust formation.

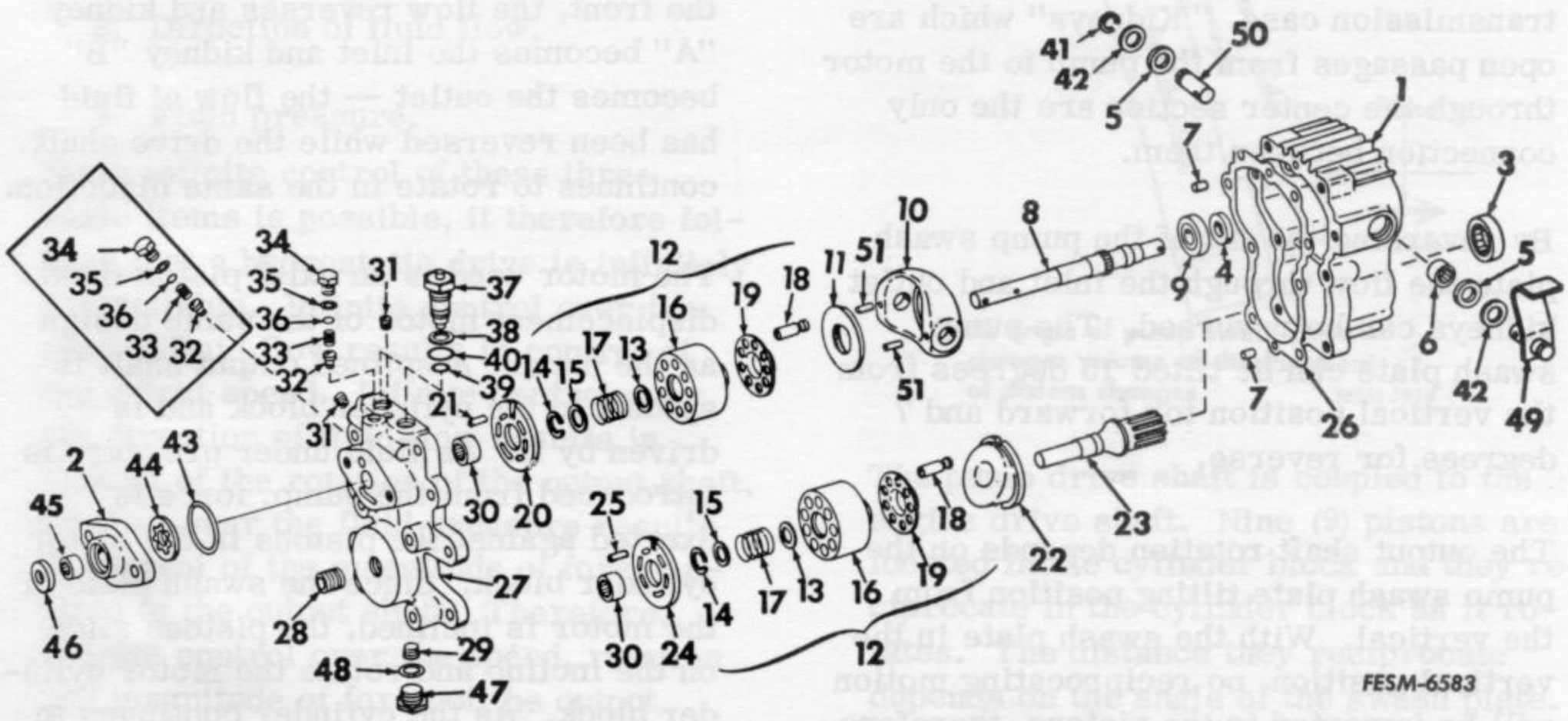

1. Housing	18. Piston assembly	35. O-ring
2. Charge pump housing	19. Retainer	36. Shim
3. Bearing	20. Plate	37. Valve assembly
4. Seal	21. Pin	38. Washer
5. Seal	22. Swash plate	39. O-ring
6. Bearing	23. Shaft	40. O-ring
7. Pin	24. Plate	41. Ring
8. Shaft	25. Pin	42. Washer
9. Bearing	26. Gasket	43. O-ring
10. Swash plate	27. Housing	44. Rotor assembly
11. Plate	28. Fitting	45. Bearing
12. Kit	29. Plug	46. Seal
13. Washer	30. Bearing	47. Plug
14. Ring	31. Plug	48. O-ring
15. Washer	32. Cone	49. Shaft assembly
16. Block	33. Spring	50. Shaft
17. Spring	34. Plug	51. Pin

Hydrostatic Transmission with Manual Unloading Check Valves

The following procedure is for model 1250 S/N 597244 and below; models 1450 and 1650 S/N 590521 and below.

If the tractor will not move or moves slowly in both directions, a preliminary check of the power train can be made as follows: (See Foldout at the back of this manual.)

1. Check the oil level. Change the oil filter.

2. Remove the frame cover.

3. Check the suction tube and fittings for tighthess.

4. Block the tractor so that the left rear wheel is off the ground and block the front wheels. Start the engine.

5. Depress both check valve spools.

6. Check the drive shaft rotation into the charge pump and out the rear of the transmission case for mechanical breakdown. "Work" the control lever to make sure there is no binding in the cam plate or linkage.

If the shaft does not turn, remove and overhaul the transmission. If the shaft is turning, continue with the following steps.

7. Check to see that both check valve spools have returned from the depressed position.

8. If neither valve spool returns "work" the speed control lever to make sure that no mechanical bind exists in the linkage, control cam and the control drive plate.

9. If both valve spools are still depressed, either the charge pump, the charge pump relief valve, or the check valves are at fault.

10. If only one valve spool returns, replace the defective spool.

NOTE: If the transmission has been removed from the tractor for service, check the condition of the final drive before reinstalling the transmission.

Hydrostatic Transmission with Self-Unloading Check Valves

The following procedure is for model 1250 S/N 597245 and after; models 1450 and 1650 S/N 590522 and after.

If the tractor will not move or moves slowly in both directions, a preliminary check of the power train can be made as follows:

1. Check the oil level. Change the oil filter.

2. Remove the frame cover.

3. Check the suction tube and fittings for tightness.

4. Support the tractor so both rear wheels are off the ground and free to move. Block the front wheels. Start the engine.

5. Check the drive shaft rotation into the charge pump and out the rear of the transmission case for a mechanical break down. Work the control lever to make sure there is no binding in the cam plate or linkage.

If the shaft does not turn, remove and overhaul the transmission. If the shaft is turning, continue with the following steps.

6. If the tractor moves slowly or not at all in only one direction, remove both check valves and switch positions. If this changes the direction in which the problem originally occurred replace the respective check valves.

7. If interchanging check valves failed to reveal the problem, check charge pressure as described on page 2-92.

Cooling Fan

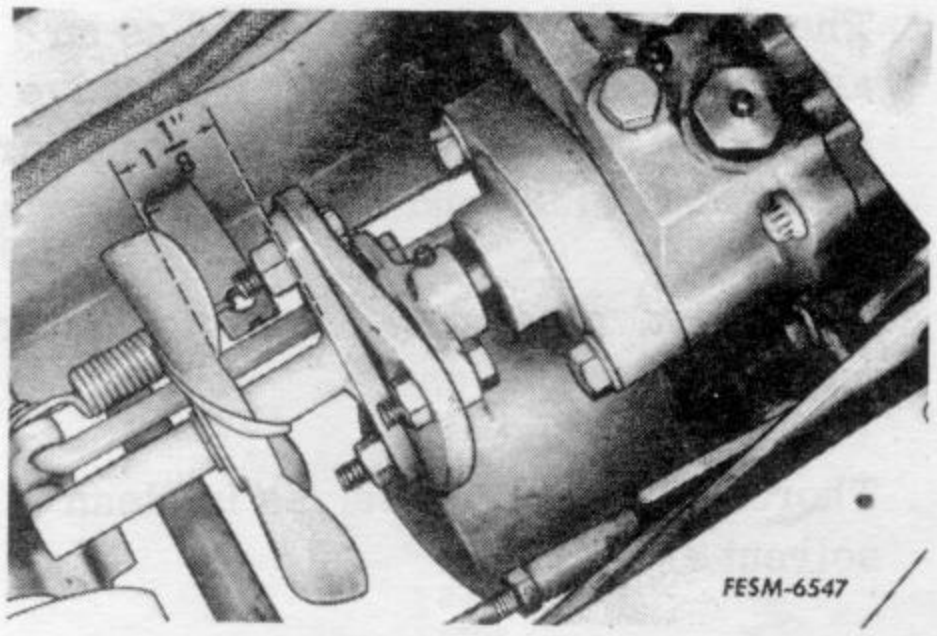

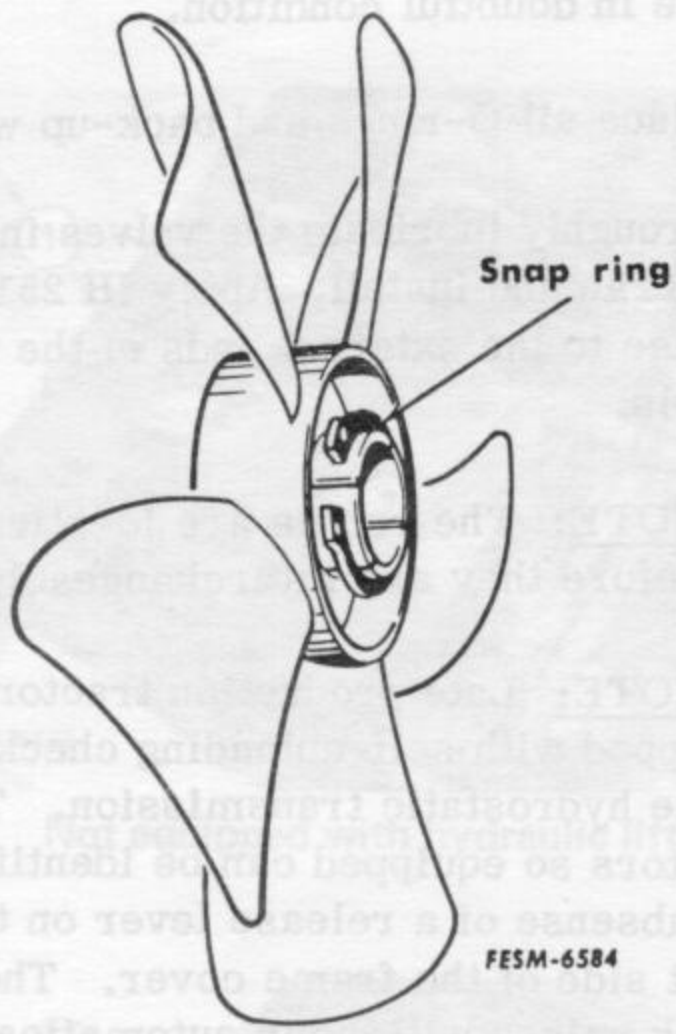

A cooling fan is located on the drive rod 1-1/8 inches forward of the flexible coupling. The fan is held in position by snap ring pressure on the shaft. The fan will move forward into the lift mechanism if the snap ring is not located over the grooves of the hub as shown.

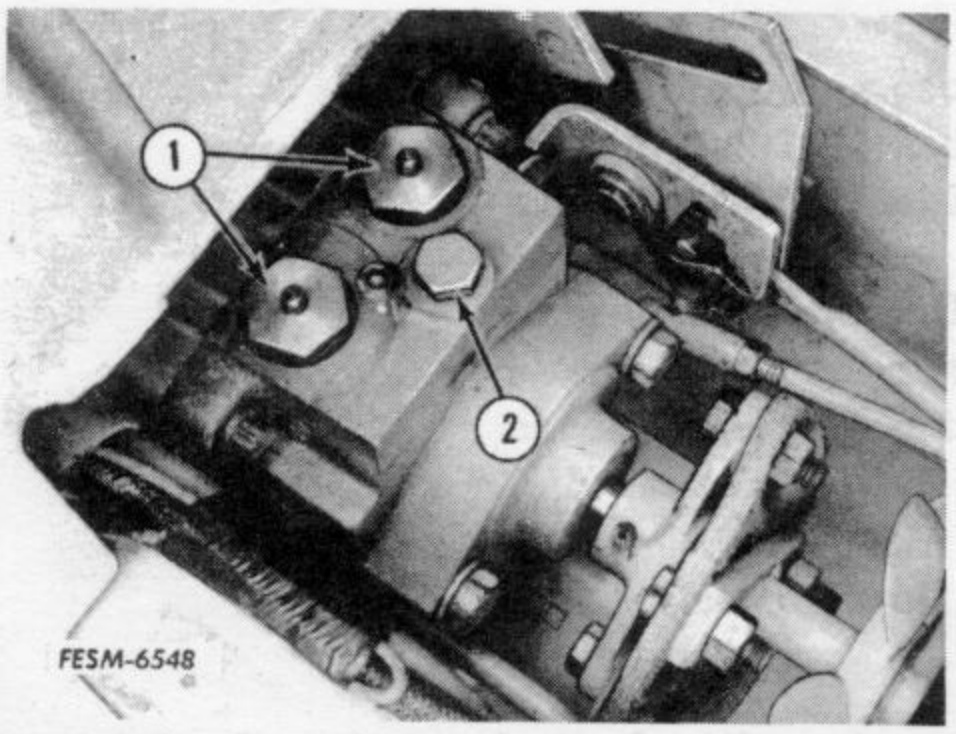

1. Check valve
2. Charge pressure relief valve

The check valves are serviced as an assembly only. Servicing of the valve is limited to replacement only, except for external O-rings and back-up washer.

The check valves may be serviced by removing the frame cover.

Thoroughly wash the valves in clean solvent and air dry.

Check the valves for dirt, paint corrosion and free plunger movement. Replace any valve in doubtful condition.

Replace all O-rings and back-up washers.

Thoroughly lubricate the valves in clean Hy-Tran and install. Apply IH 251 HEP grease to the external ends of the valve spools.

NOTE: The valves are identical, therefore they are interchangeable.

NOTE: Late production tractors are equipped with self-unloading check valves in the hydrostatic transmission. The tractors so equipped can be identified by the absense of a release lever on the right side of the frame cover. These check valves will dump automatically when the engine is shut off. This will allow the tractor to be rolled.

CAUTION! Any time the engine is shut off the brake pedal should be locked to prevent the tractor from rolling.

Charge Pump Relief Valve Service

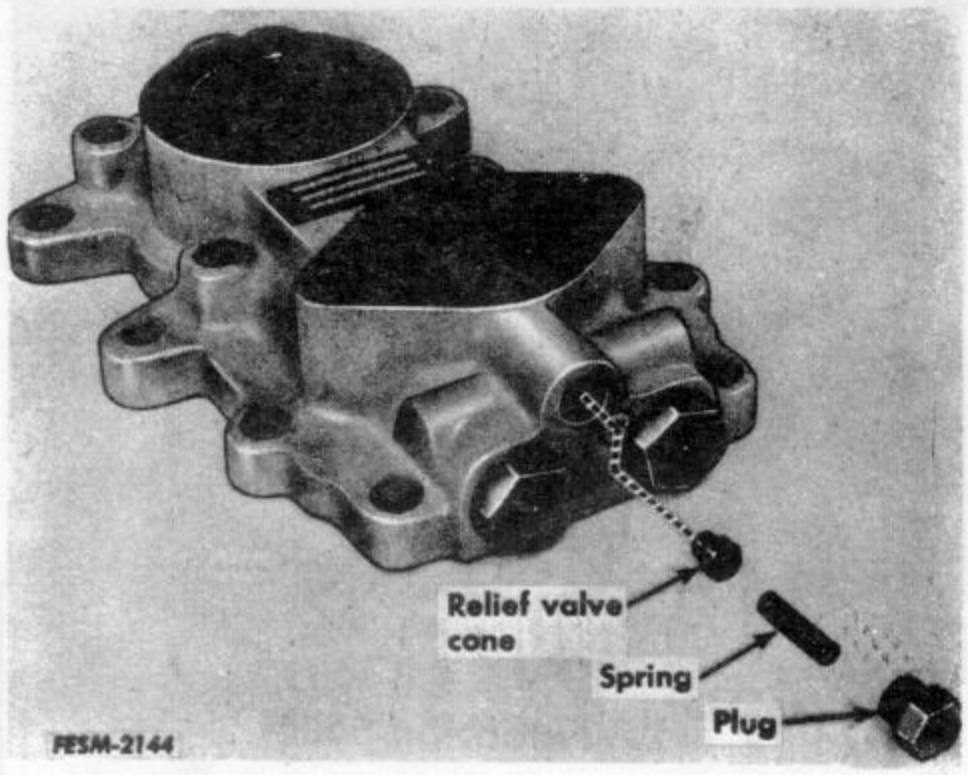

The charge pump relief valve may be serviced by removing the frame cover.

1. Remove the relief valve plug, shim pack (if any), spring and cone from the center section housing.

2. Wash and dry the components.

3. Check the spring for pitting and rust.

4. Check the cone for wear or damage. Check the valve seat in the center section housing for dirt, nicks and scratches.

5. Install the relief valve in the reverse order of removal. Be sure to use a new O-ring on the plug.

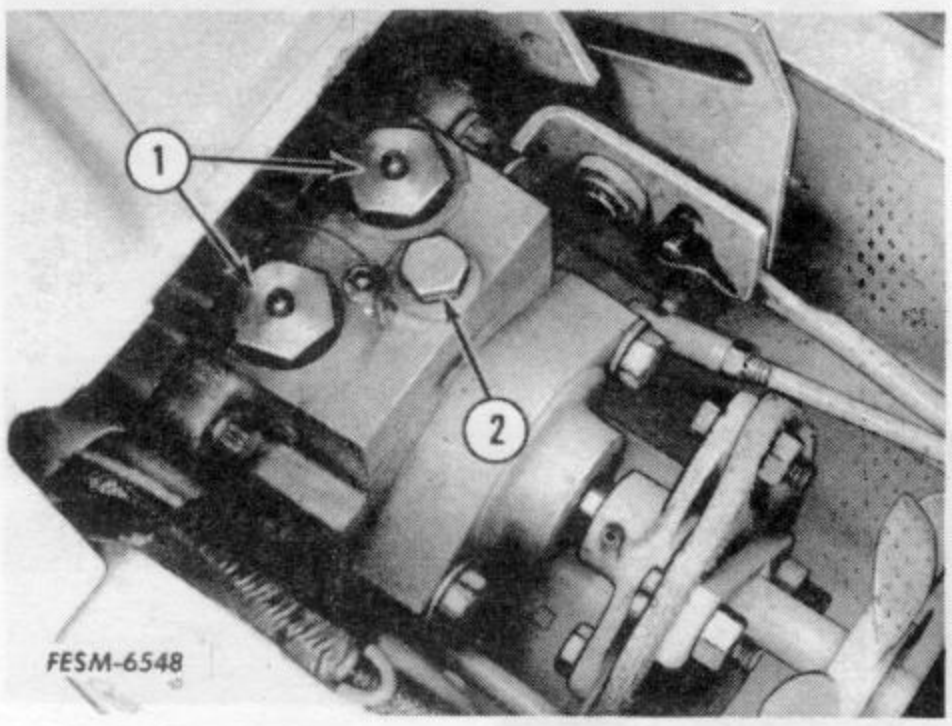

Not equipped with hydraulic lift.

1. Check valve
2. Charge pump relief valve

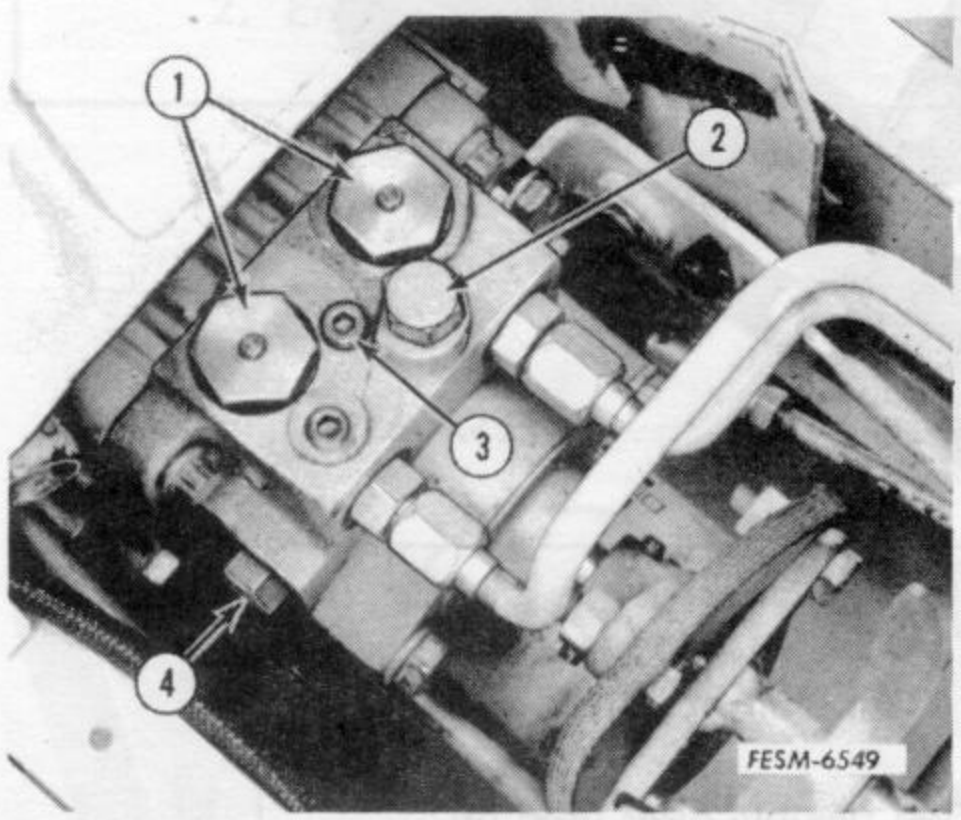

Equipped with hydraulic lift.

1. Check valve
2. Implement lift relief valve
3. Test port
4. Charge pump relief valve

Charge Pump Service

Removal and Disassembly

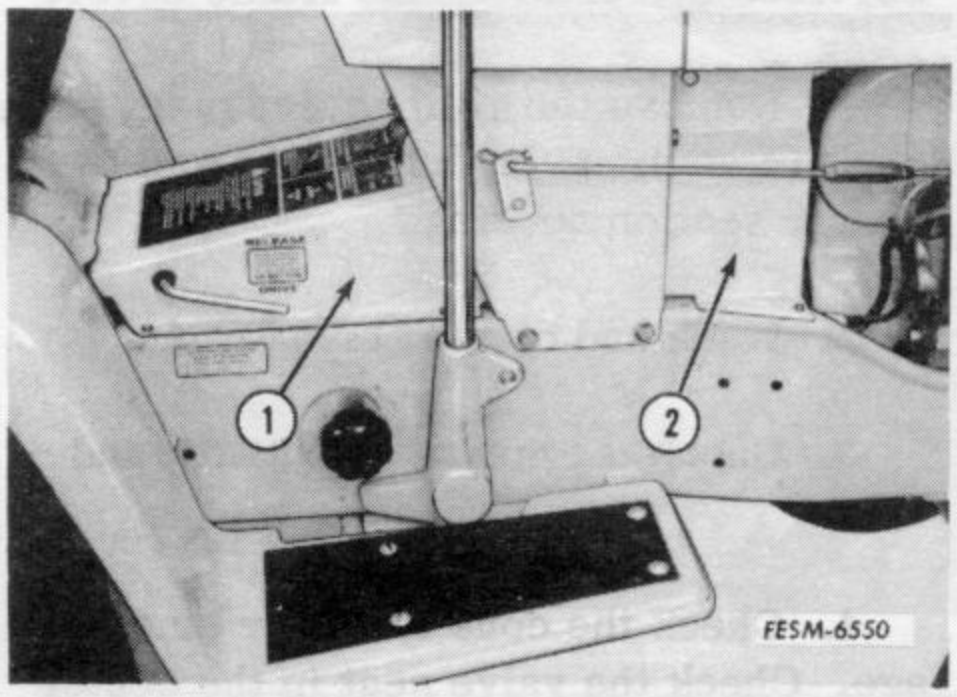

1. Remove the frame cover and right side extension panel.

2. Remove the bolts connecting the drive rod and coupling arm to the flexible disc in the rear.

1. Frame cover
2. Extension panel

NOTE: In Cub Cadets below S/N 622952 there is a steel ball spacer located in the flex coupling to properly locate the drive shaft. Be sure the ball is in place during reassembly.

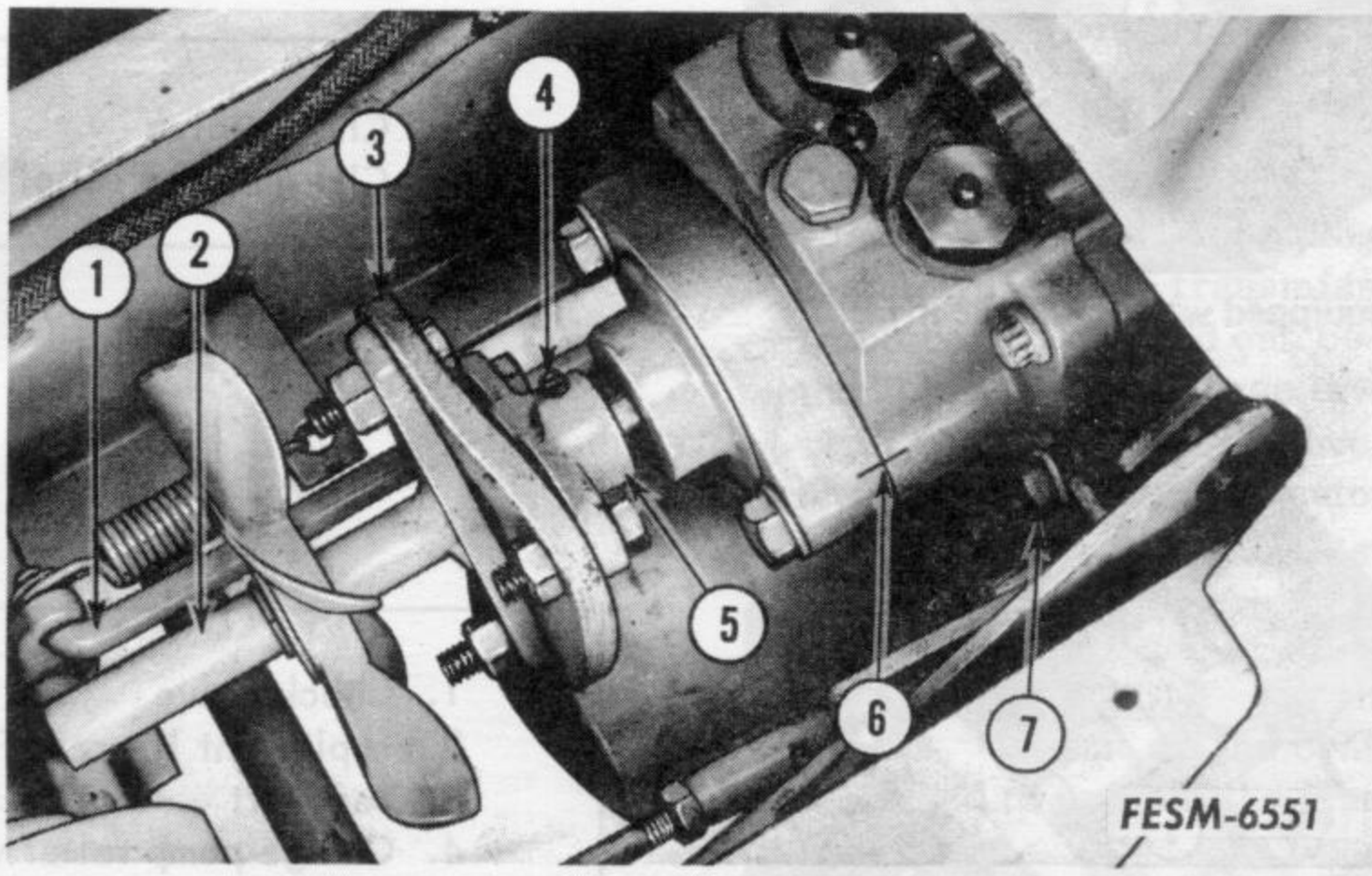

1. Brake rod
2. Drive rod
3. Flexible disc*
4. Roll pin
5. Coupling arm
6. Alignment marks
7. Cam bracket bolt

*Two flexible discs used on S/N 622 952 and above.

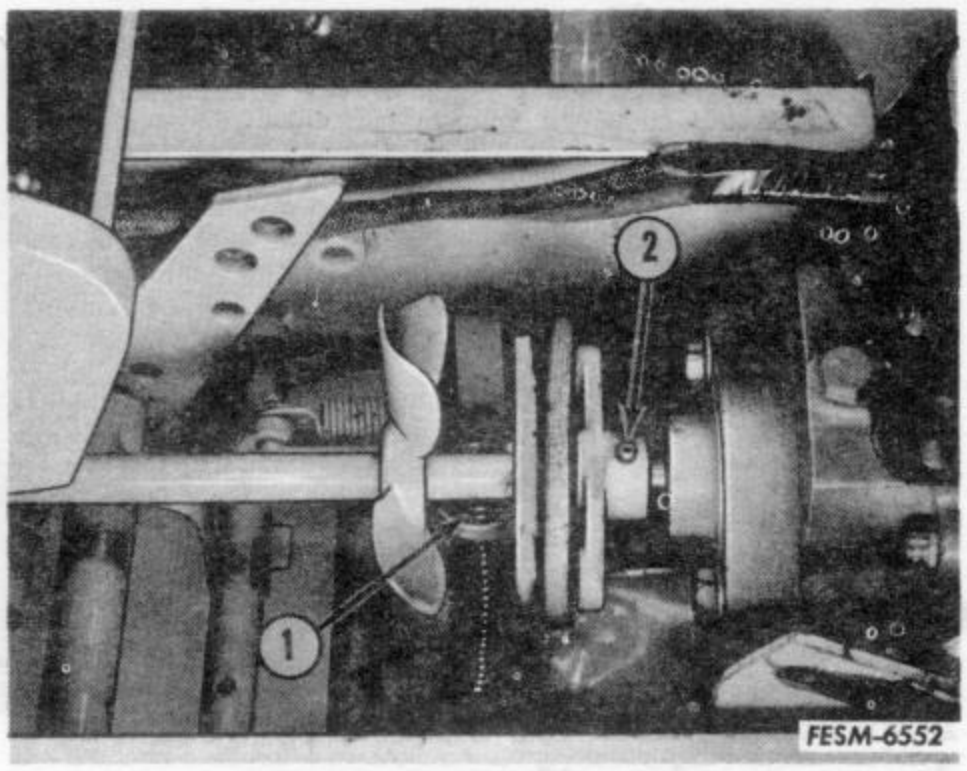

1. Hydraulic jack
2. Roll pin

3. Support the drive rod to prevent damage to the charge pump and remove the roll pin from the coupling arm.

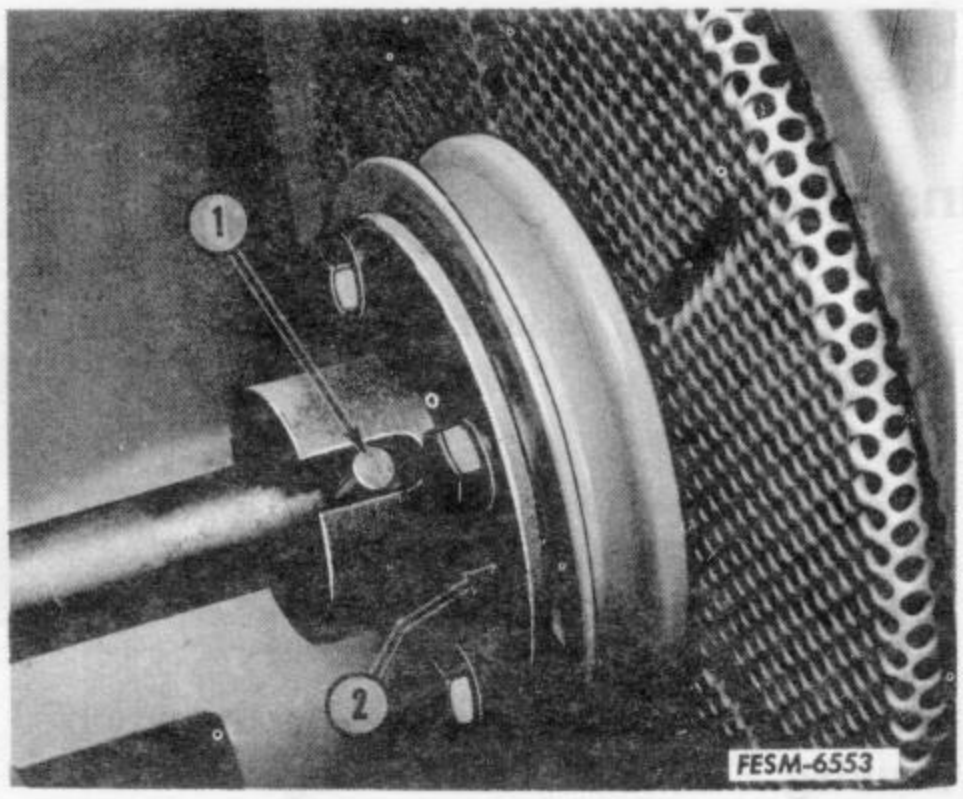

1. Dowel pin
2. Engine drive plate hub

4. Remove the dowel pin from the front of the drive rod at the engine drive plate hub.

5. Slide the drive rod forward and remove the flexible coupling disc and coupling arm. Slide the drive rod assembly out to the rear.

6. Thoroughly clean and deburr the outside of the transmission before attempting any disassembly. Remove paint from shaft surfaces.

IMPORTANT: Mark the charge pump housing before disassembly, as it is possible to install the pump incorrectly resulting in low charge pressure.

7. Remove the capscrews securing the charge pump housing to the center section housing. Carefully remove the pump housing. The rotor assembly may stick to the housing. Do not drop the assembly.

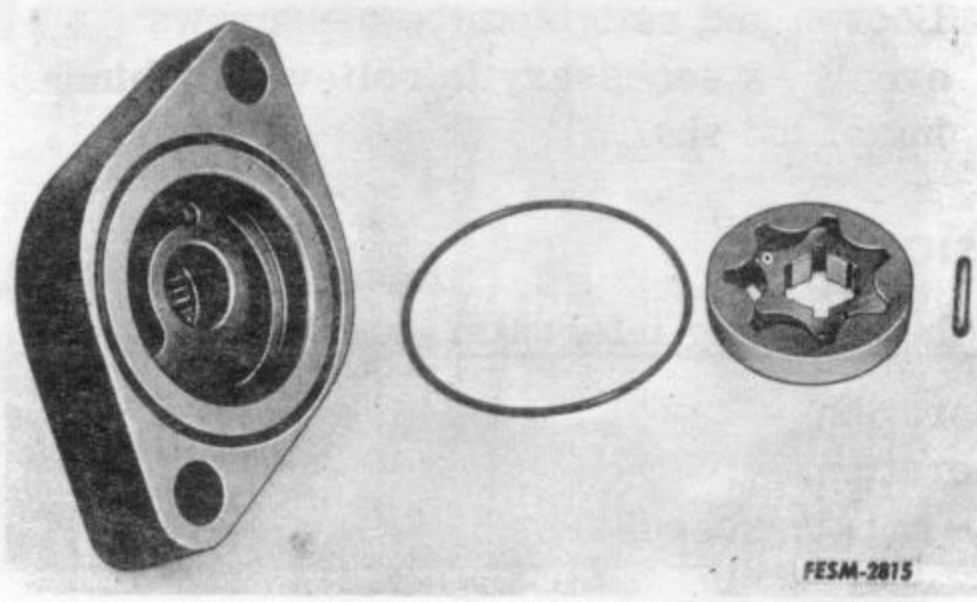

8. Remove the rotor and pin assembly (if it was not removed in step 7). Because of the polished surface, be sure to protect the assembly against nicks, scratches and rust.

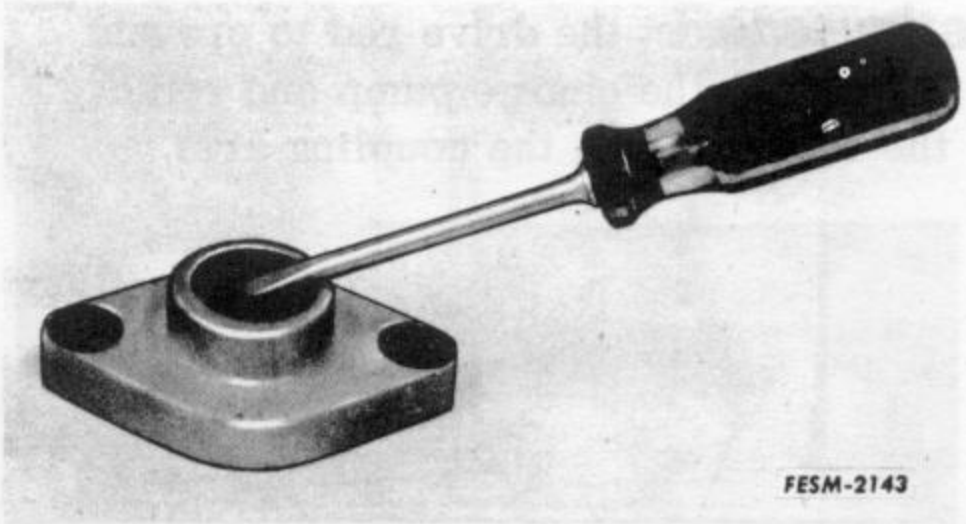

9. Using a screwdriver, pry the lip seal out of the pump housing.

10. Check needle bearing and replace if necessary.

Inspection and Repair

The rotor assembly is serviced as a unit. The charge pump housing, O-ring, lip seal and rotor pin are all serviced separately.

Inspect all parts for excessive wear or damage, replace if necessary.

Use a new lip seal and O-ring.

Reassembly and Installation

Reassembly and installation of the charge pump to the center section housing is the exact reverse of removal and disassembly with particular attention paid to the following:

1. Flat side

1. Thoroughly lubricate all parts in clean Hy-Tran.

2. If removed, install the new needle bearing in the pump housing. Be sure the bearing is "bottomed" in the bore.

3. Install a new oil seal in the pump housing. Install a new O-ring.

4. If the housing is new or unmarked, the flat side by the mounting bolt hole should face the right side of the machine.

5. Torque the pump housing capscrews evenly to 52 ft. lbs. Rotate the pump shaft while tightening the capscrews. Loosen and retighten the capscrews evenly as necessary to relieve any binding of the shaft.

Transmission

Oil filter must be changed in the following intervals:

At 10 hours of operation
At 50 hours of operation
Every 150 hours - not to exceed one year.

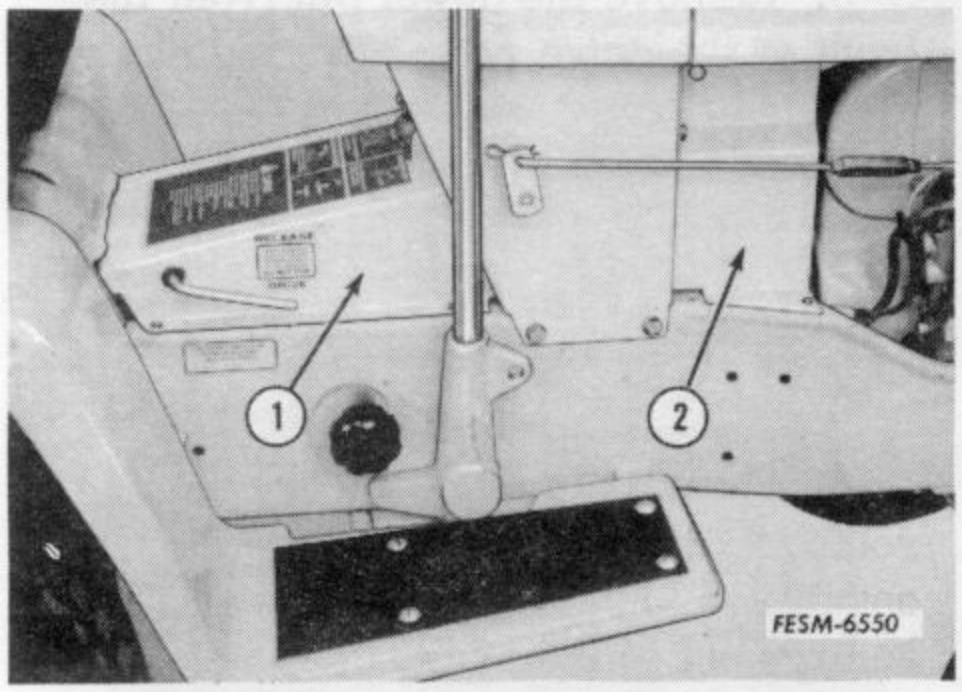

1. Remove the frame cover and right side extension panel.

2. Remove the hydraulic lines from the center section to the hydraulic lift control valve, if equipped.

1. Frame cover
2. Extension panel

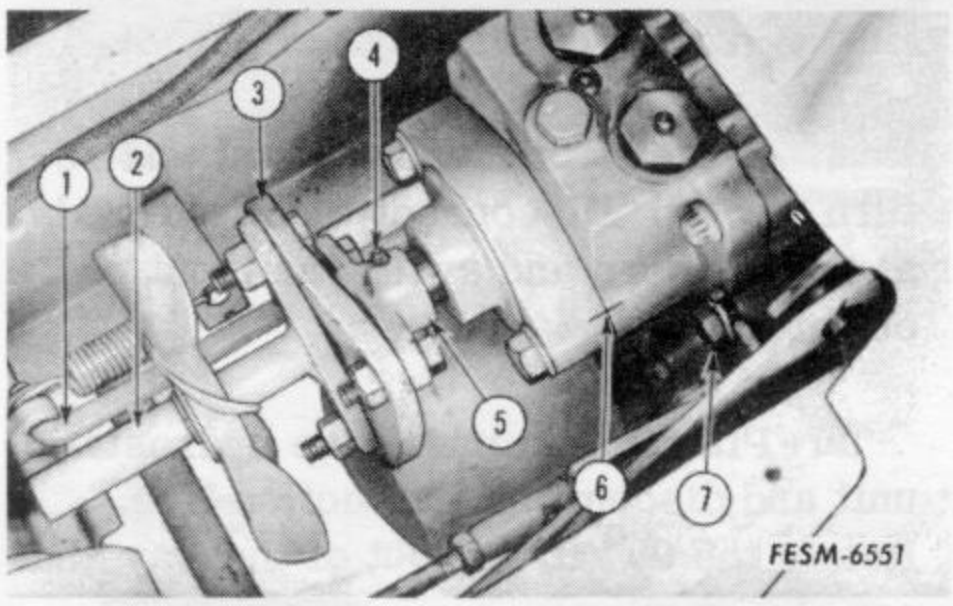

3. Remove the bolts connecting the drive rod and coupling arm to the flexible disc in the rear.

1. Brake rod
2. Drive rod
3. Flexible disc*
4. Roll pin
5. Coupling arm
6. Alignment marks
7. Cam bracket bolt

*Two flexible discs used on S/N 622 952 and above

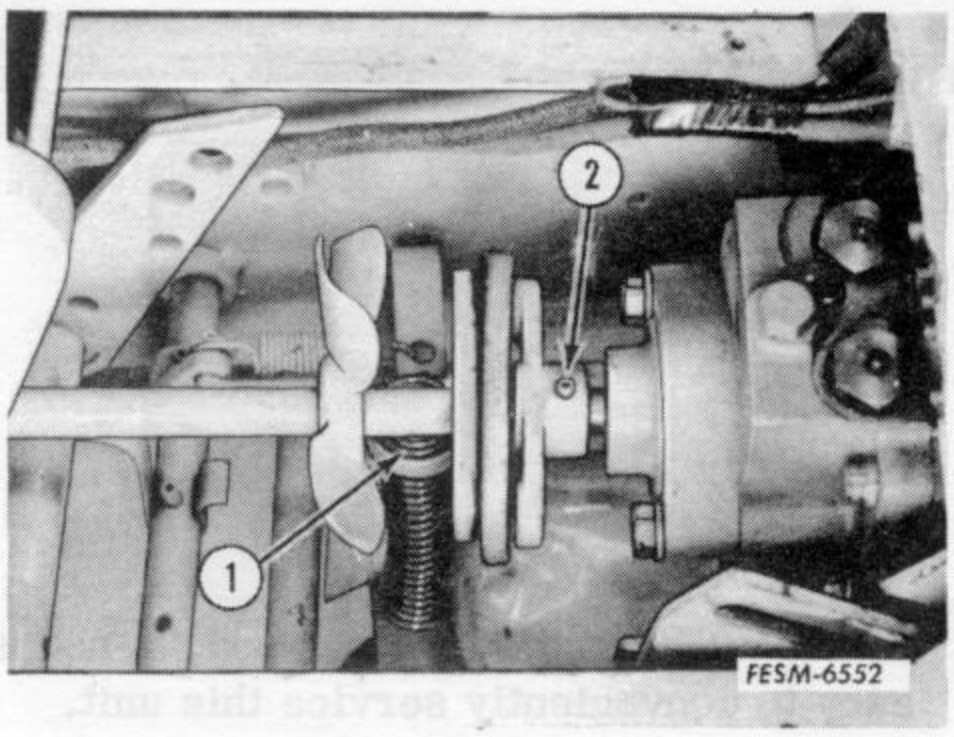

4. Support the drive rod to prevent damage to the charge pump and remove the roll pin from the coupling arm.

1. Hydraulic jack
2. Roll pin

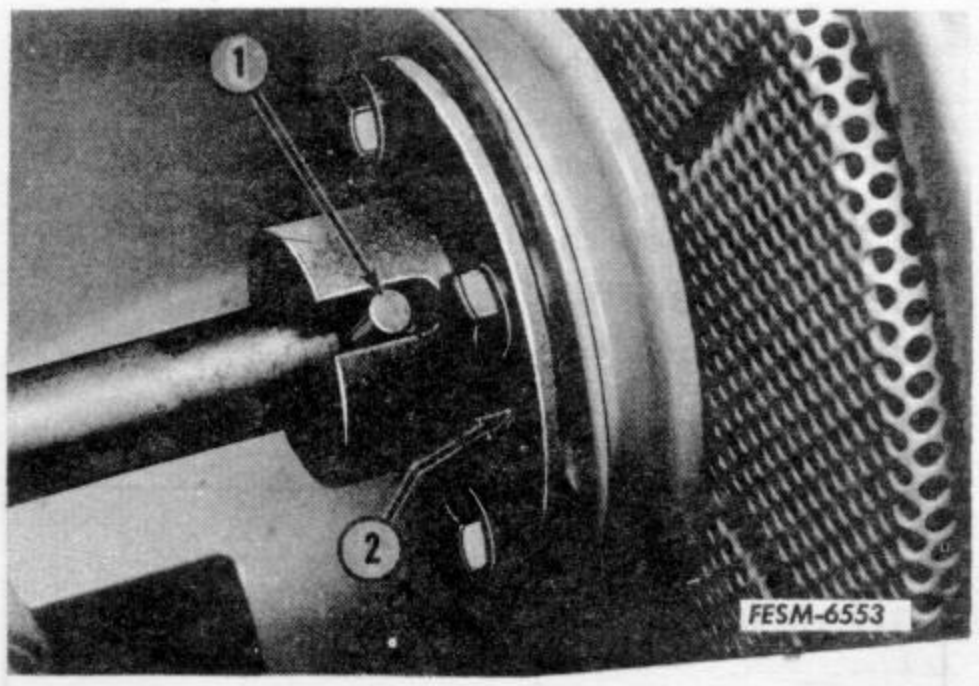

1. Dowel pin
2. Engine drive plate hub

5. Remove the dowel pin from the front of the drive rod at the engine drive plate hub.

6. Slide the drive rod forward and remove the flexible coupling disc and coupling arm. Slide the drive rod assembly out to the rear.

7. Remove the cam bracket mounting bolts and move the cam bracket and linkage up out of the way.

8. Disconnect the brake rod and return spring. Disconnect the brake rods at the calipers and swing the front rod out of the way.

9. Place a pan under the hydrostatic unit and disconnect the suction line. Rotate the 90° fitting out of the way and cap the opening.

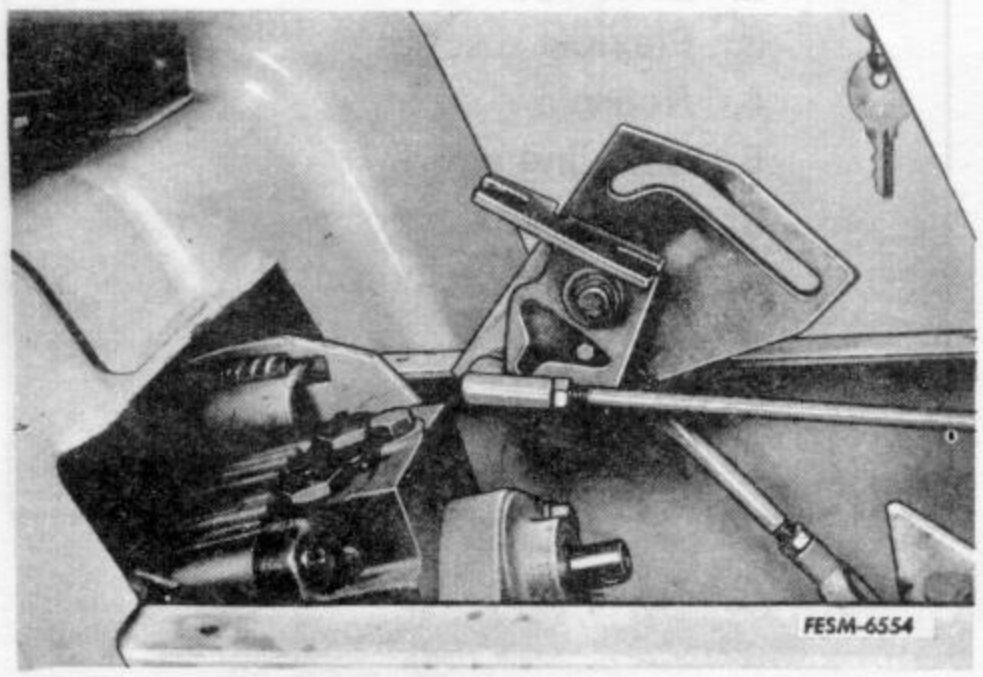

10. Remove the hydrostatic mounting bolts from the rear frame housing. Bring the unit forward, up and out.

Disassembly

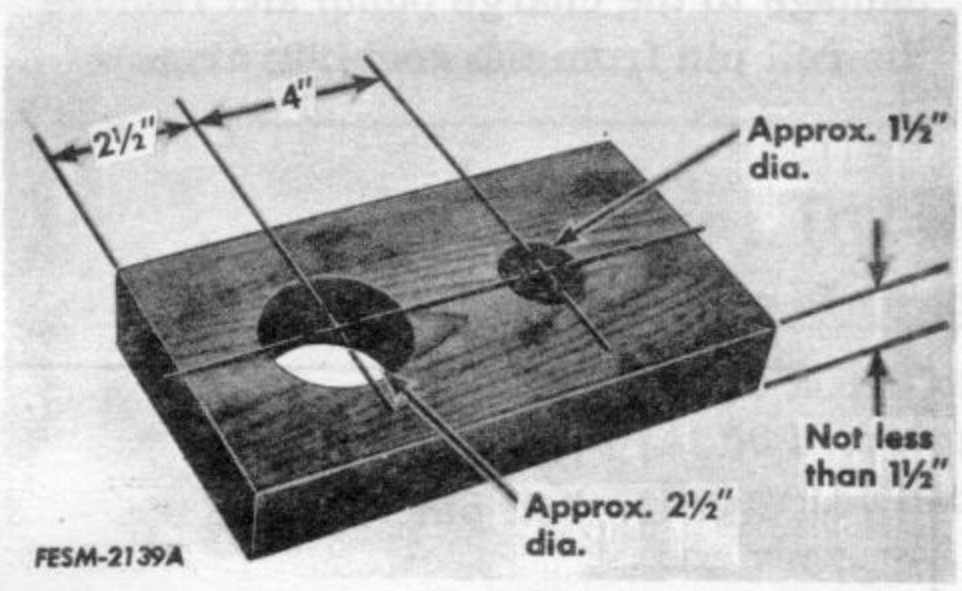

A holding fixture, made of wood, is necessary to conveniently service this unit.

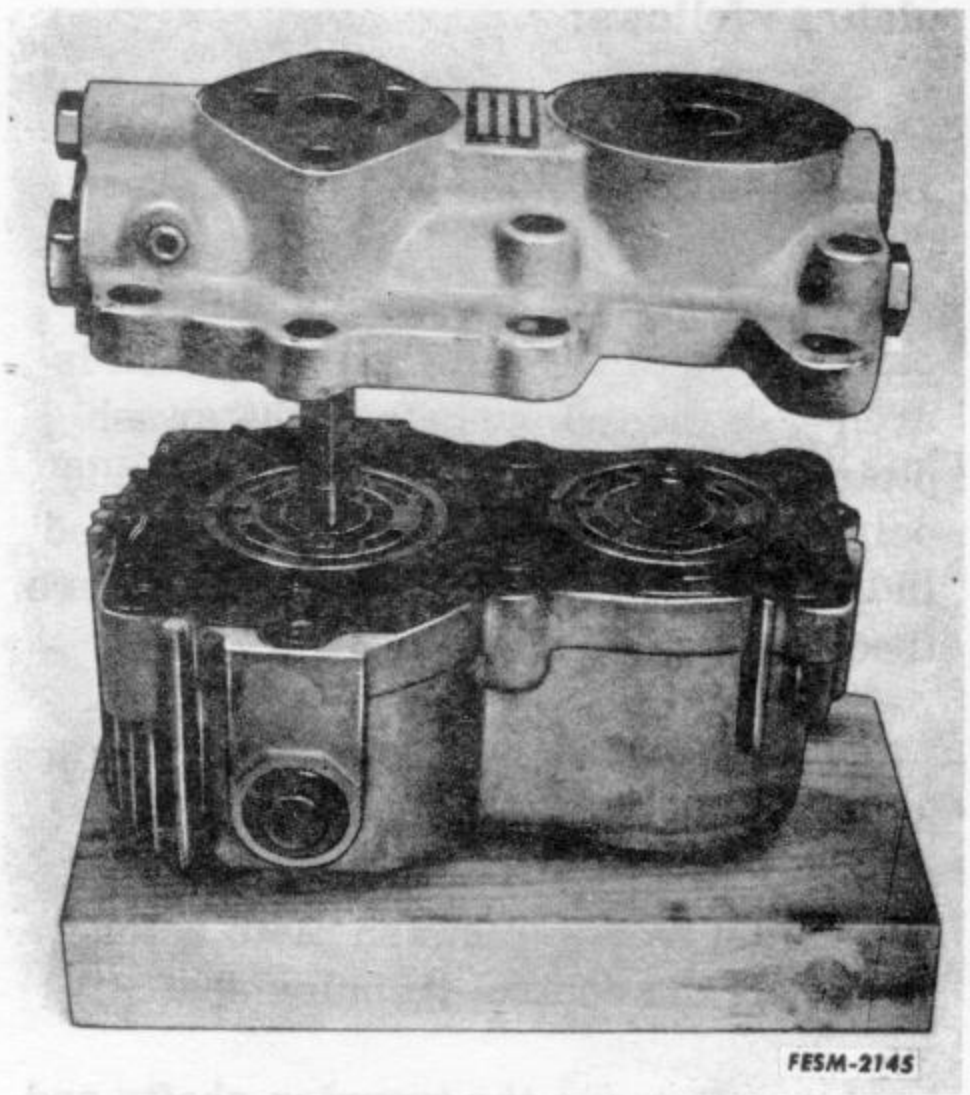

1. Be sure the outside surfaces of the transmission have been thoroughly cleaned. Place the transmission assembly in the holding fixture.

IMPORTANT: Mark the charge pump housing before disassembly, as it is possible to install the pump incorrectly resulting in low charge pump pressure.

2. Remove the charge pump. Remove the capscrews securing the center section housing to the transmission housing.

3. Lift the center section housing from the transmission housing.

IMPORTANT: The valve plates may stick to the center section housing surface. Be extremely careful not to drop them.

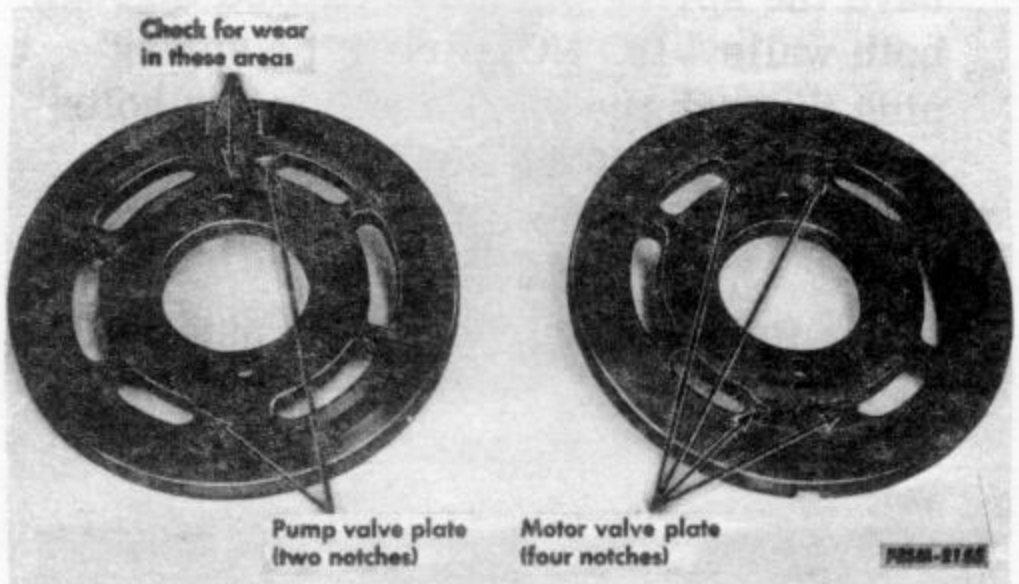

4. Remove the pump and motor valve plates (if not removed in step 3) noting the location of each plate. The valve plate with two notches is used on the pump assembly and the plate with four notches on the motor assembly. Remove the valve plate pins.

5. Tip the transmission housing so that the pump and motor cylinder block assemblies can be removed. Grasp the assemblies so that the pistons will not fall out and be damaged.

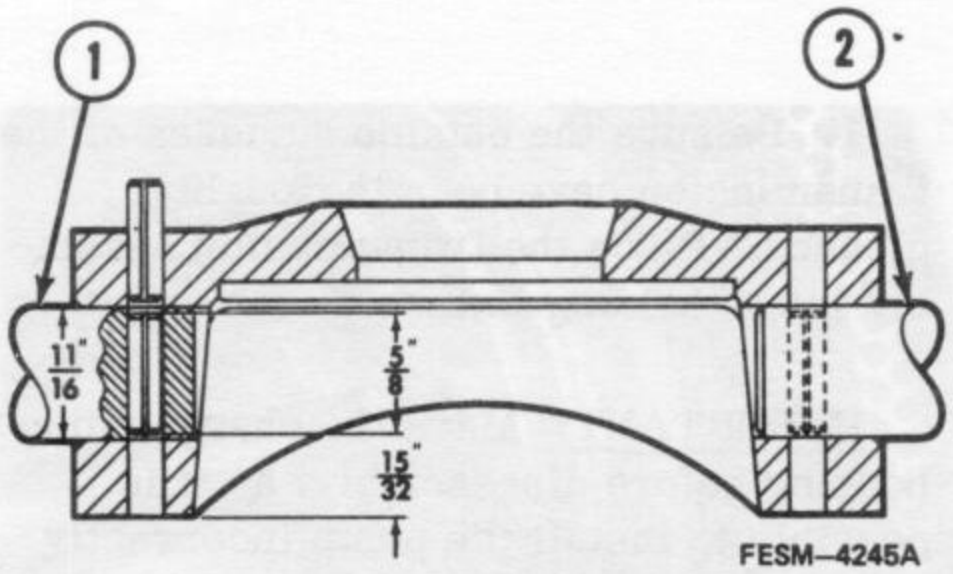

Hydraulic pump swash plate.

1. Control shaft
2. Trunnion shaft

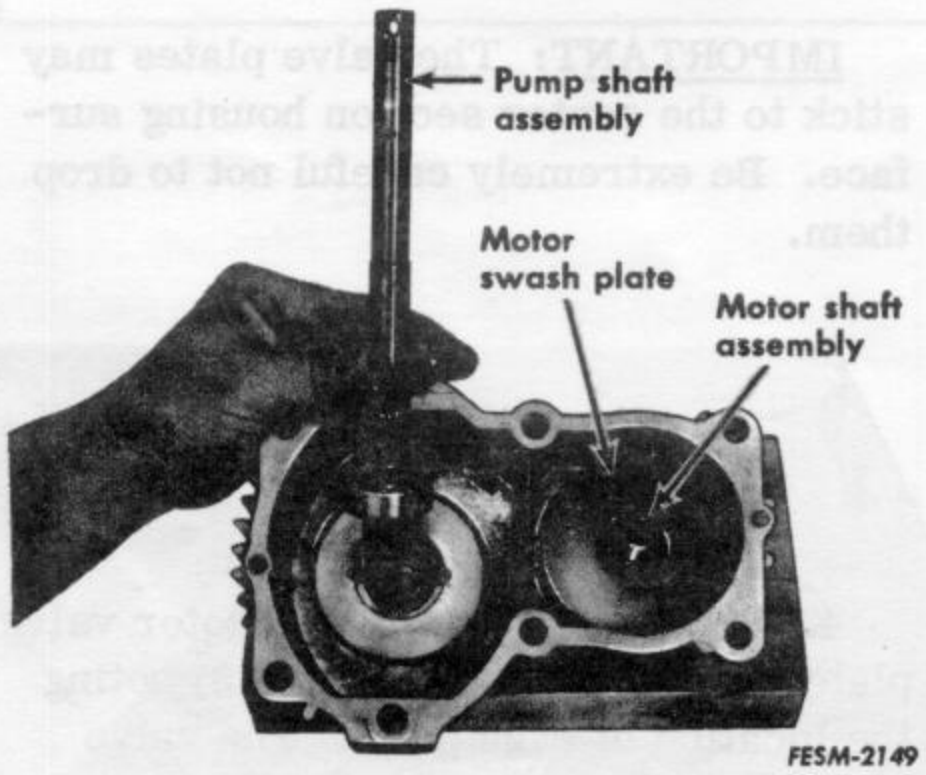

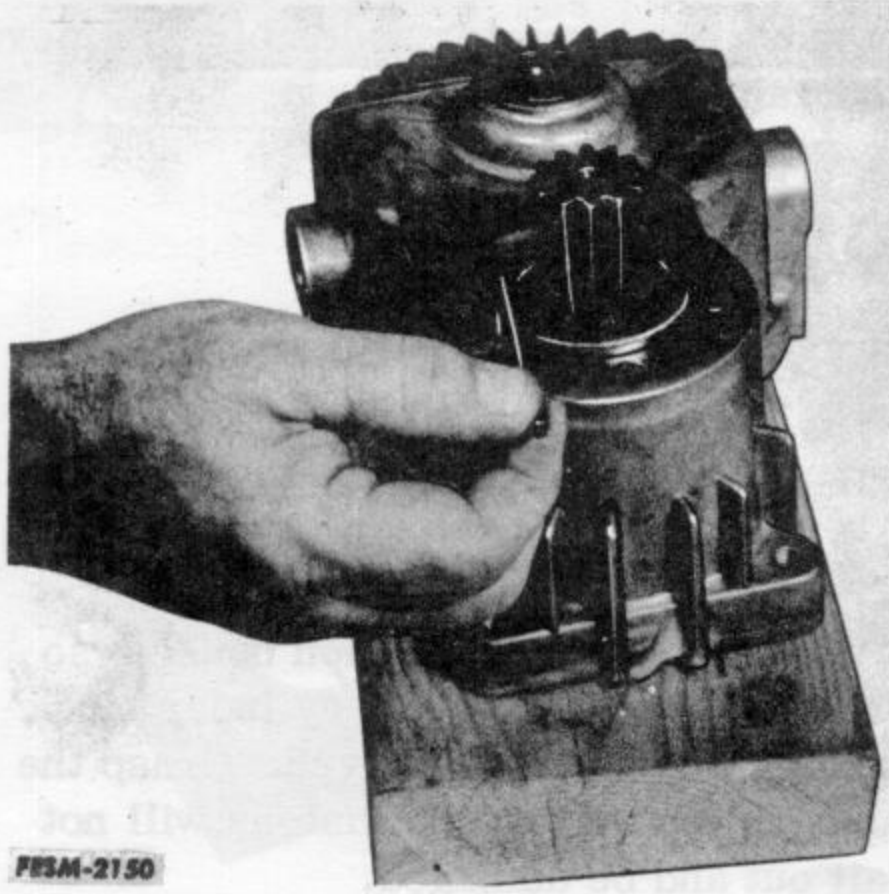

6. Remove the trunnion shaft assemblies from the hydraulic pump swash plate as follows:

a. Mark or tape a punch exactly 15/32 inch from the end.

b. Drive on the spring pins very carefully until the mark on the punch is even with the top surface of the swash plate, a distance of 15/32 inch. At this point the spring pins should be centered in the trunnion shafts, and the shafts are free of the swash plate.

NOTE: Two spring pins are used to hold the control trunnion shaft in the swash plate. Remove the protruding spring pin from the swash plate before removing the control trunnion shaft.

c. Remove the trunnion shafts and swash plate from the transmission case.

IMPORTANT: Some swash plates have the spring pin holes drilled through both walls. DO NOT drive the spring pins through the shaft and into the holes in the bottom of the swash plate as removal is then very difficult.

7. Remove the pump shaft assembly.

8. Remove the socket head capscrews securing the hydraulic motor swash plate.

NOTE: Some models have Allen head screws and others have 12 point socket head screws.

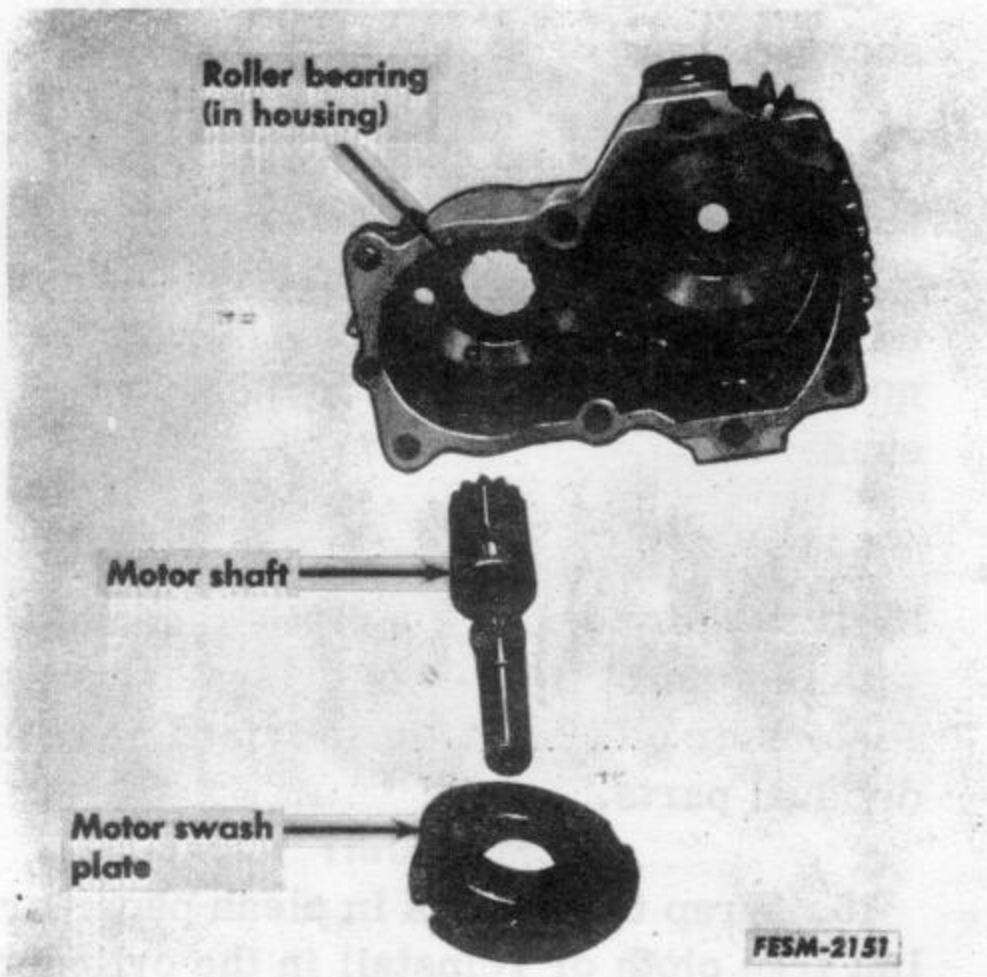

9. Remove the transmission motor shaft and swash plate from the housing.

Inspection and Repair

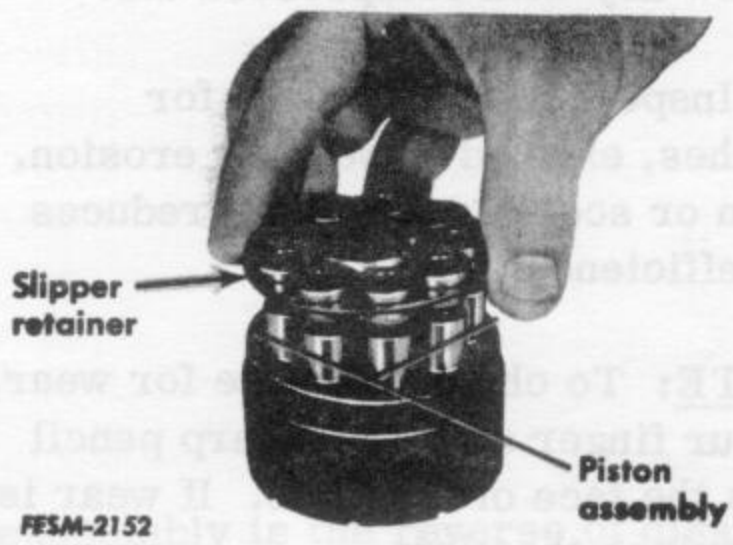

1. Remove piston and slipper assembly.

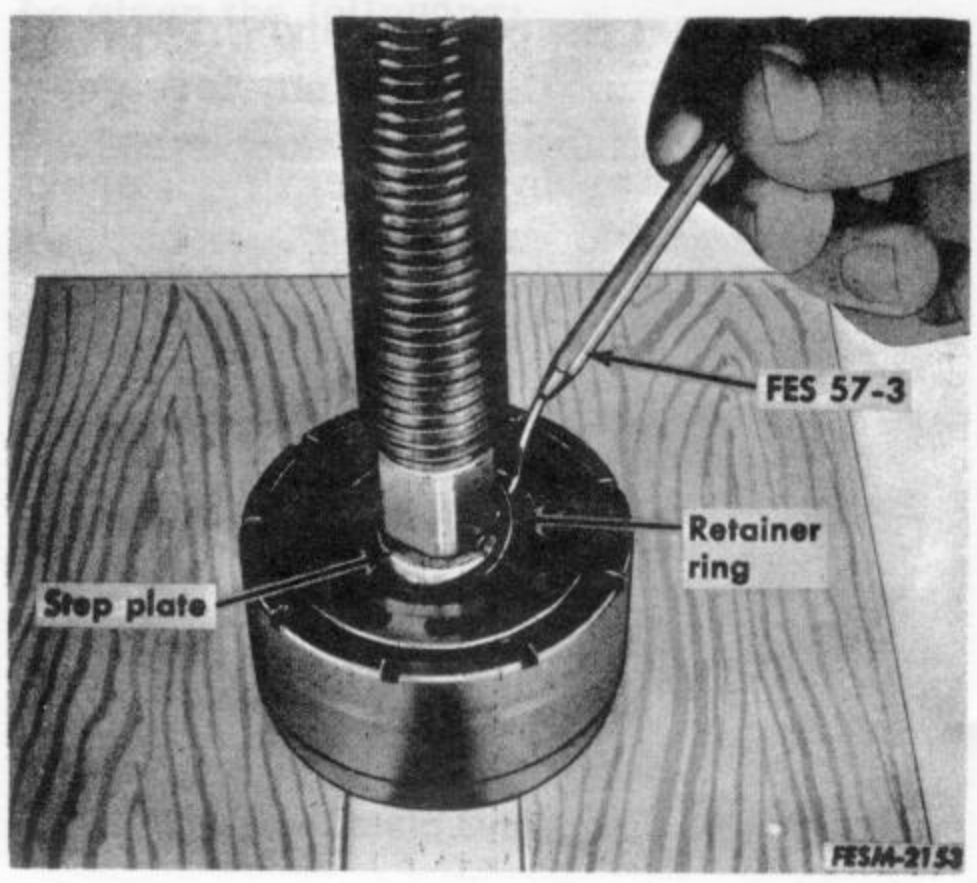

2. Place the cylinder block assembly in a press on wood blocks.

3. Press on the spring retainer, using a step plate to compress the cylinder block spring. Remove the retaining ring.

4. Carefully release the press. Remove the spring retainer, spring and spring washer. Remove the cylinder block from the press.

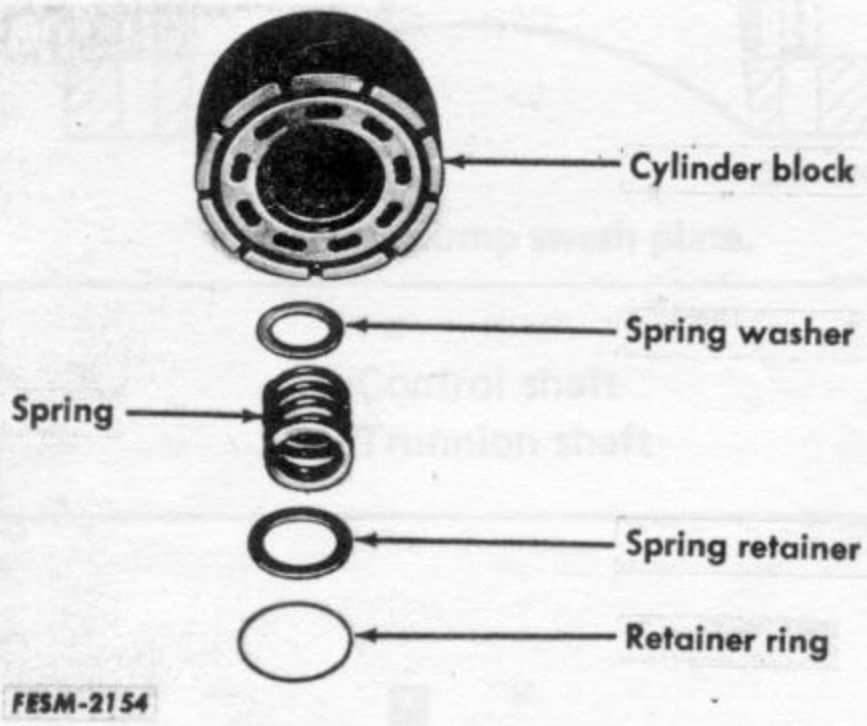

5. Thoroughly clean all parts and blow dry with compressed air.

6. Check the spring against specifications.

7. Check the cylinder block valve face for damage and the piston bushings for excessive wear. Any linear scratches along the length of the bore will reduce efficiency. Check piston fit in the bushings.

8. Install the spring washer (bevel side in), spring and spring retainer. Place the assembly in a press.

9. Compress the spring, using a step plate. Install the retaining ring.

10. Release the press and wrap the assembly in clean paper or lint free cloth before setting aside.

11. Remove the pistons from the slipper retainer. Thoroughly clean the pistons and blow dry with compressed air. Be certain center oil passage is open.

12. Carefully inspect each piston for scoring, wear or scratches.

13. Check the slippers for severe scratches or embedded material. Slippers may be lapped, but do not remove more than .005 inch. All slippers must be within .002 inch thickness of each other.

14. If cylinder bores or pistons are badly worn or scored, a block assembly with pistons is available for replacement. Pistons or block are not serviced as individual parts.

15. Wrap the pistons in clean paper or lint free cloth or reinstall in the cylinder block and wrap the assembly.

16. Thoroughly clean the valve plate and blow dry with compressed air.

17. Inspect the valve plate for scratches, excessive wear or erosion. A worn or scored valve plate reduces pump efficiency.

NOTE: To check the plate for wear, run your finger nail or a sharp pencil across the face of the plate. If wear is felt, replace the plate.

18. Inspect the pin slot and grooves of the valve plate. Clean out any foreign matter and deburr the surface as necessary.

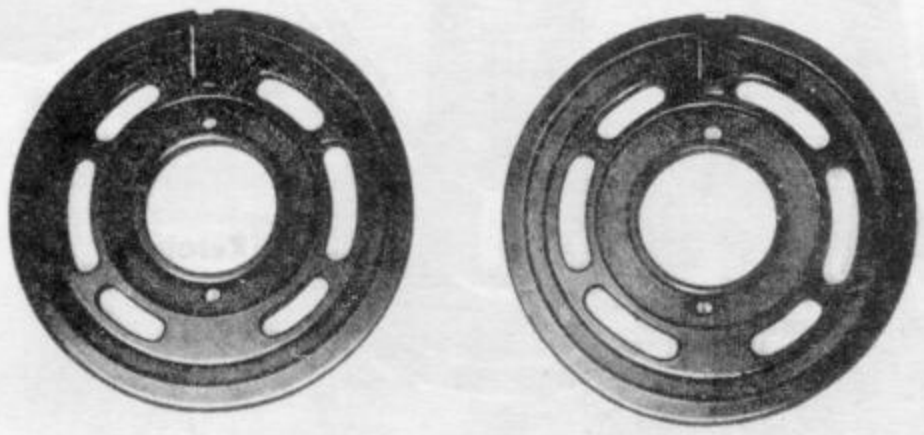

Valve plate

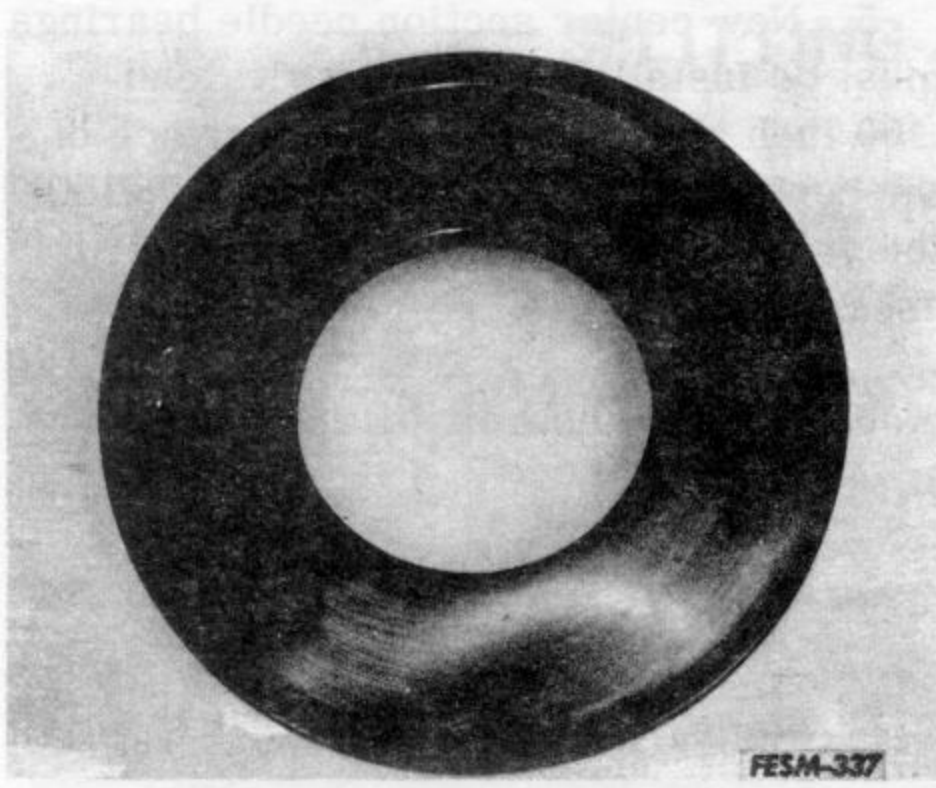

Thrust plate.

19. Inspect the slipper retainer for damage. A slight wear pattern where the slippers ride is normal. Replace if wear is excessive.

20. Inspect the thrust plate (for the hydraulic pump swash plate) for wear, embedded material, or scoring.

21. Inspect all the bearings and replace as necessary.

Reassembly

Reassembly is the reverse of disassembly however, particular attention should be given the following:

1. Thoroughly lubricate all parts in clean Hy-Tran. Pipe plugs in the center section housing showing leakage must be removed, doped (teflon tape on the threads is ideal) and reinstalled.

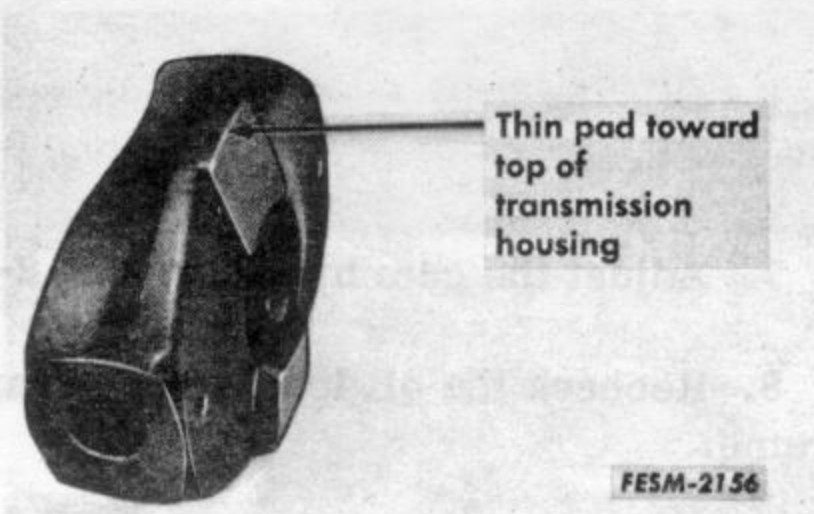

2. Be sure to install the pump swash plate with the thin pad toward the top of the transmission housing.

3. Use all new O-rings, seals and gaskets.

The valve plate with two notches is used in the pump assembly and the plate with the four notches is used in the motor assembly.

4. The thickness of the piston slippers in the block assembly must not vary more than .002 inch of each other.

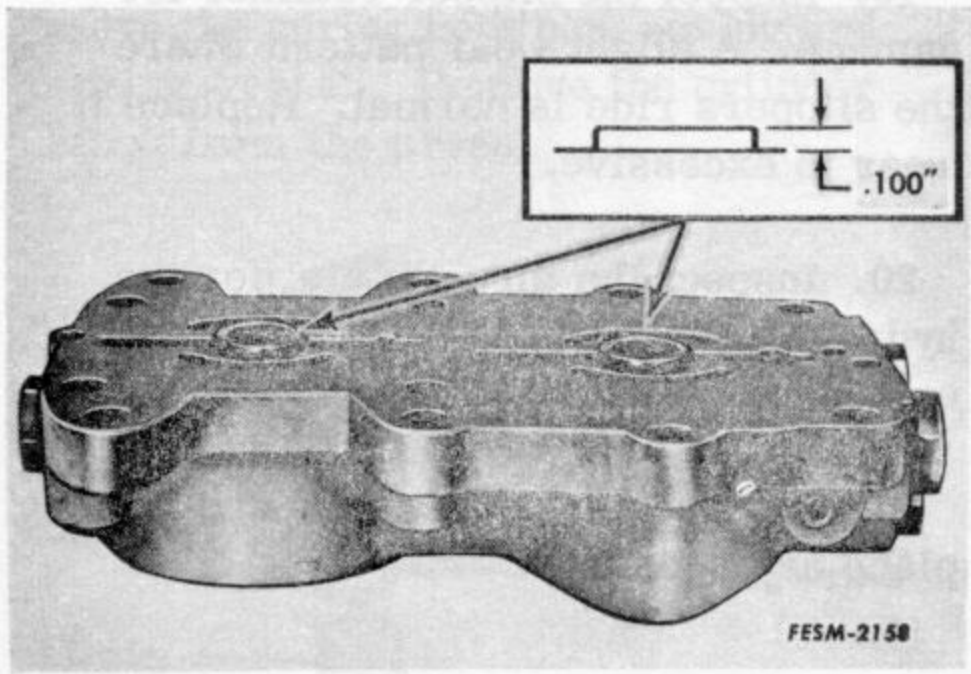

5. New center section needle bearings must be installed so that they extend .100 inch above the machined surface of the center section. The bearings "pilot" the valve plates when the unit is re-assembled.

6. Install a new oil filter.

Installation

IMPORTANT: Prior to attaching the hydrostatic drive unit onto the differential case, squirt oil into the drain which is directly underneath the motor output shaft and the filter port. Turn the unit upside down to allow oil to flow into the passages. Rotate the input pump shaft and output motor shaft to insure free rotation.

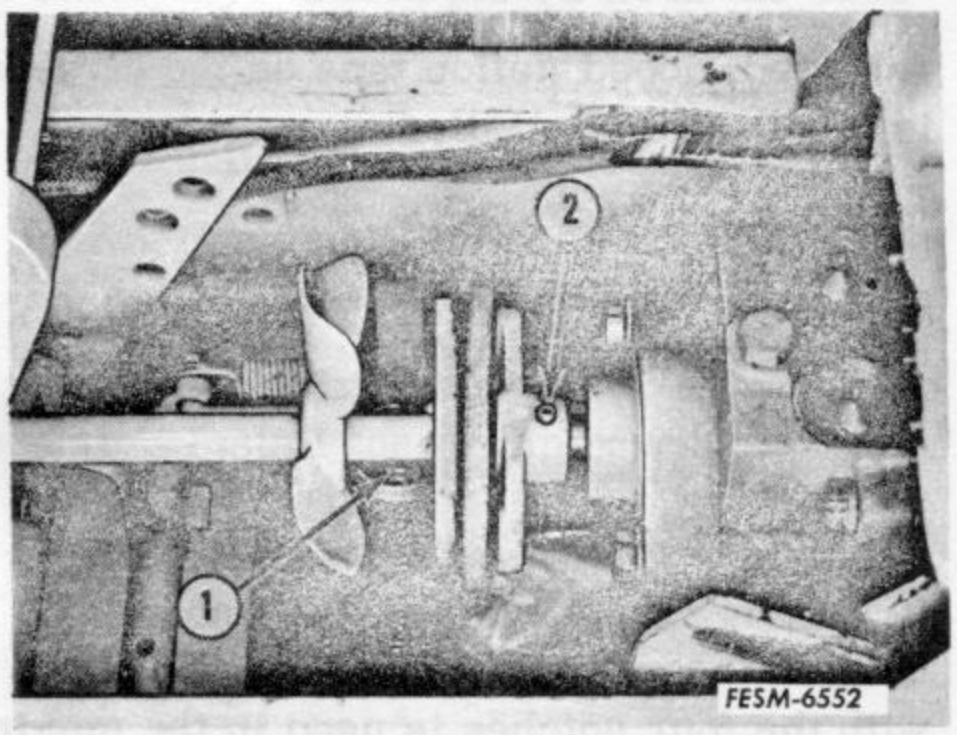

1. Hydraulic jack
2. Roll pin

1. Install the hydrostatic unit on the rear frame housing with all the bolts except the one which also holds the cam bracket. Torque the bolts to 30 ft. lbs.

2. Attach the front brake rod, return spring and rear brake rods in the caliper assemblies.

3. Attach the cam bracket but do not tighten the bolts as the bracket must be adjusted.

4. Install the drive rod, coupling arm, flexible disc and pins. Support the drive rod when installing the coupling arm pin to prevent damage to the pump.

5. Install the hydraulic lines to the control valve if they were removed.

6. Fill the rear frame to the proper level with IH Hy-Tran or its equivalent.

7. Adjust the cam bracket (page 2-57).

8. Recheck the oil level in the rear frame.

SPLITTING AND RECOUPLING

Splitting the Tractor

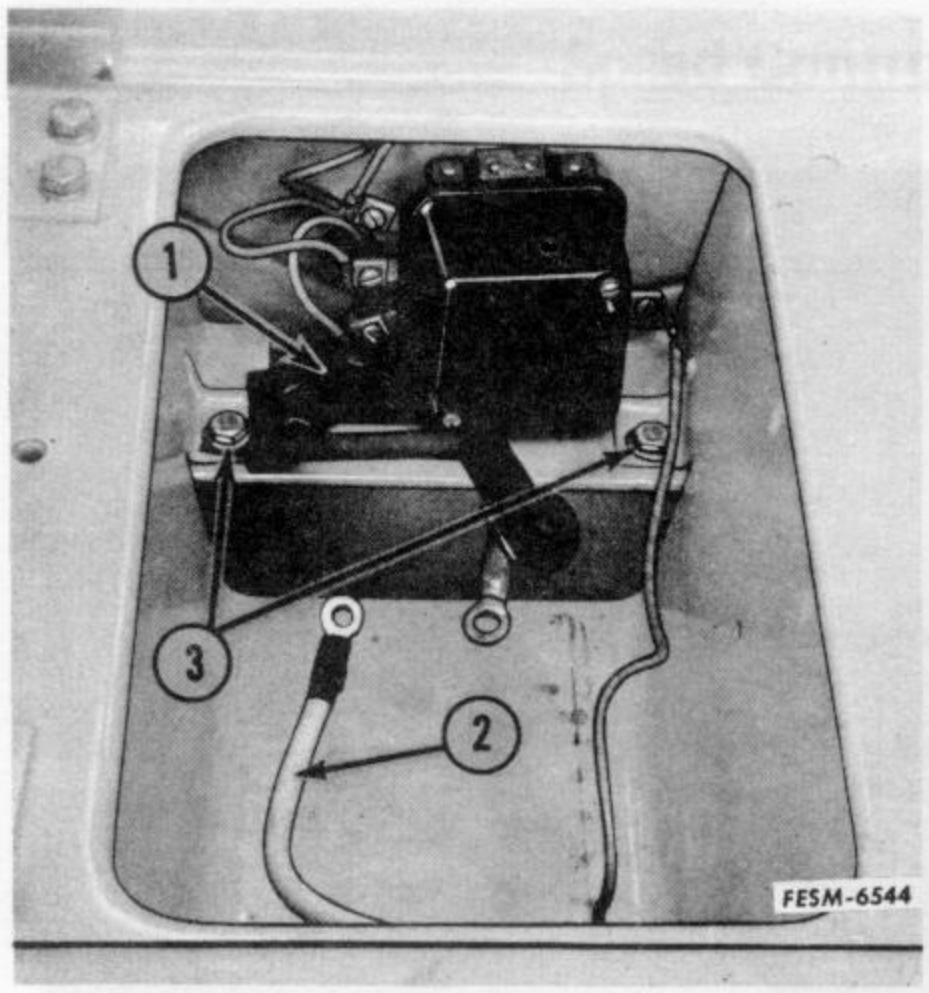

1. Remove the battery and battery hold down bracket.

2. Remove the rear fender to frame bolts and the battery ground wire.

3. Disconnect the wire harness from the voltage regulator and mounting clip, if equipped.

1. Wire harness
2. Battery ground wire
3. Fender to frame bolt

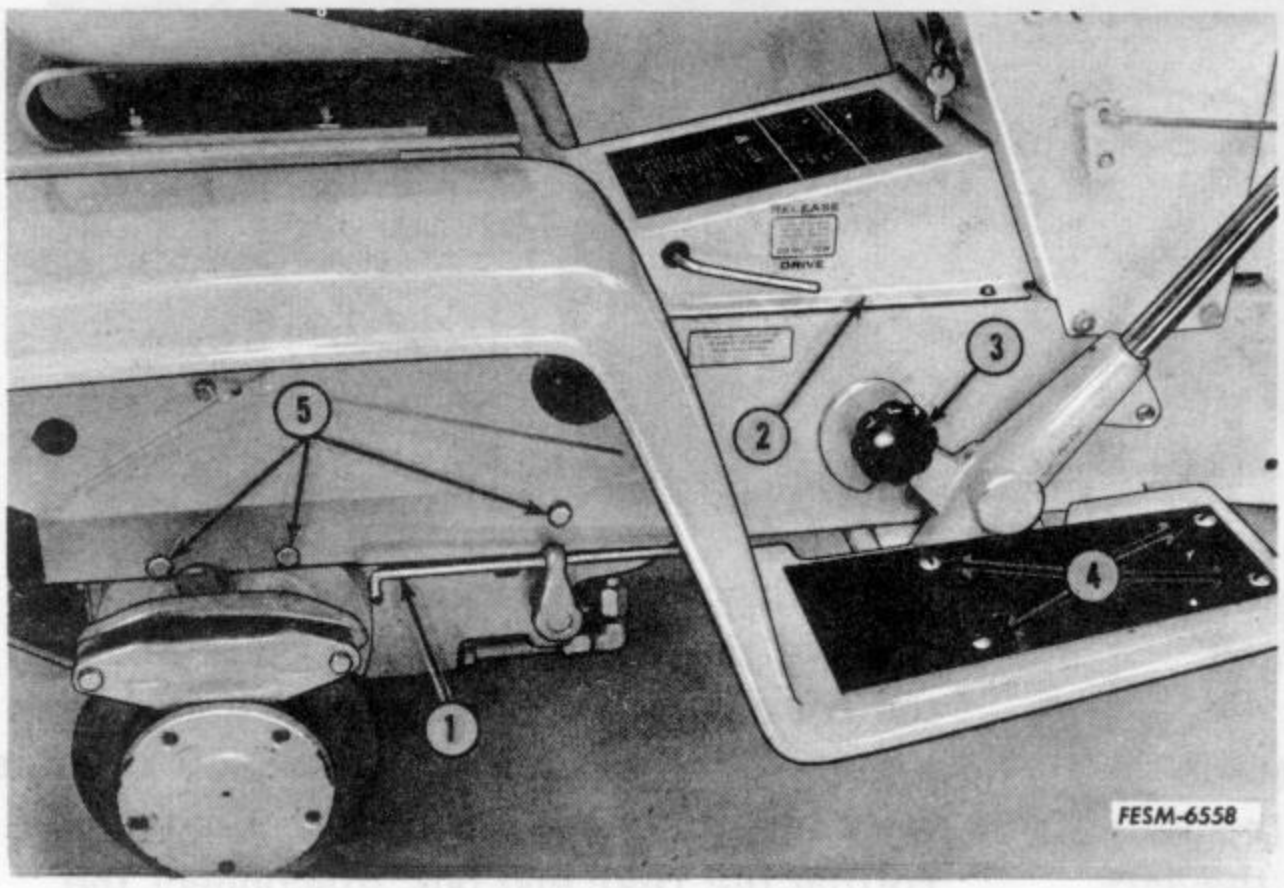

4. Remove the mounting screws from the foot platforms and the implement height adjustment knob.

5. Remove the frame cover.

1. Brake rod
2. Frame cover
3. Implement knob
4. Foot platform screws
5. Frame mounting bolts

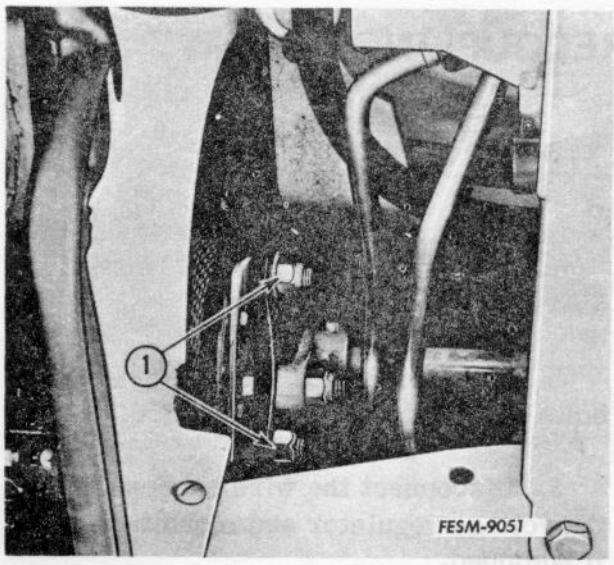

6. Models 1250, 1450 and 1650:

a. Remove an extension panel and disconnect the front flex coupling.

1. Disconnect here

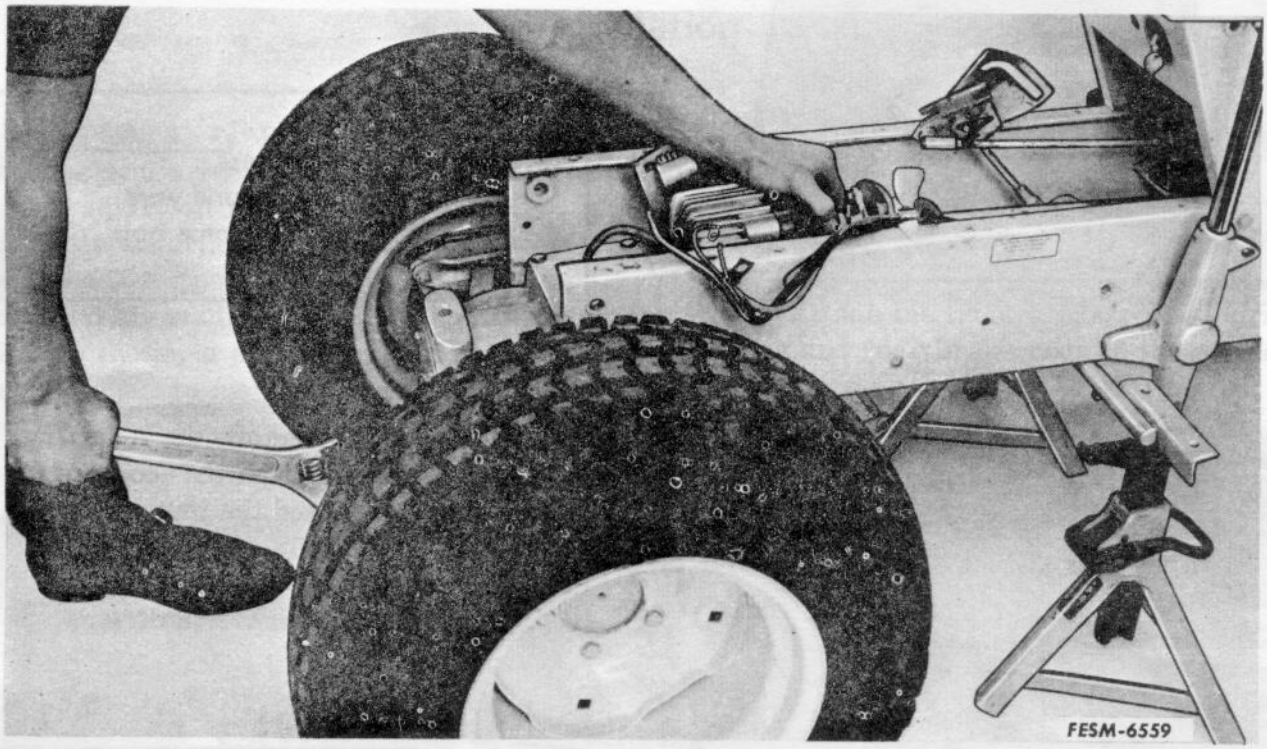

7. Remove the cam bracket mounting bolts and move the cam bracket and linkage up out of the way.

8. Disconnect the rear brake rods from the caliper assemblies and the brake lever rod from the cross shaft.

9. Support the frame of the tractor, remove the frame mounting bolts and roll the rear end out. Tractors equipped with a three point hitch attachment will require the removal of the lift lever. Before rolling the rear end out, disconnect the lift bar from the lift lever and raise the frame high enough to remove the lift lever and shaft.

Recoupling the Tractor

1. Recouple the tractor by reversing the splitting procedure.

2. Check the oil level in the rear frame and fill to proper level with IH Hy-Tran or its equivalent.

3. Adjust the cam bracket (page 2-57).

4. Recheck the oil level of the rear frame.

Speed Control Lever Adjustment

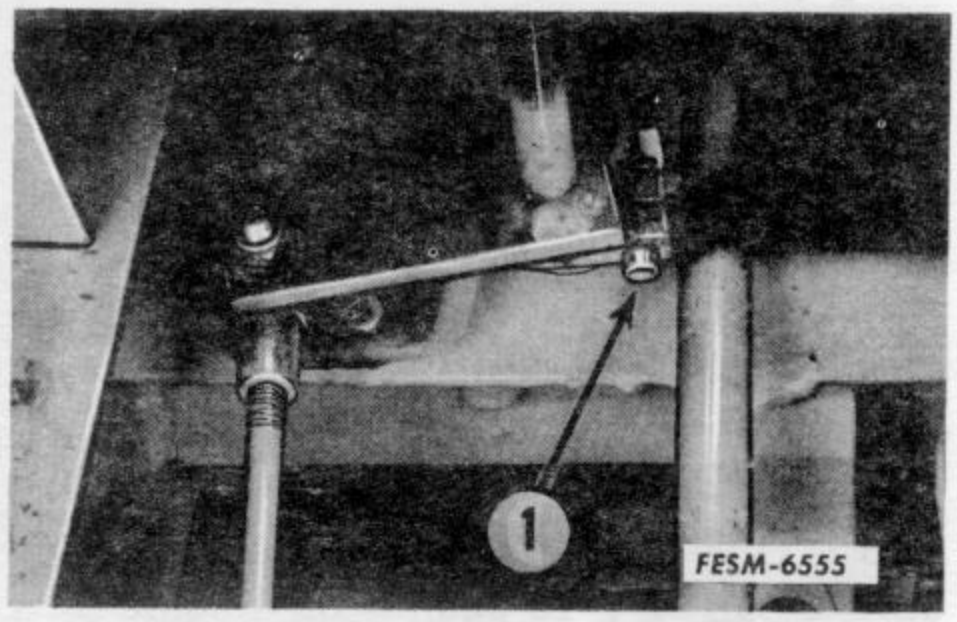

1. Friction adjustment

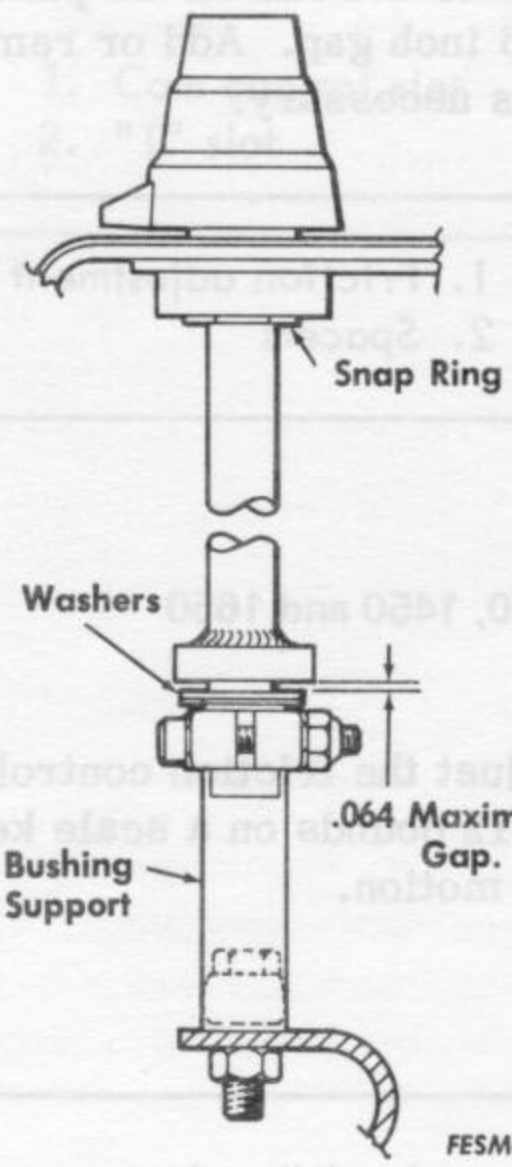

Upper Snap Ring

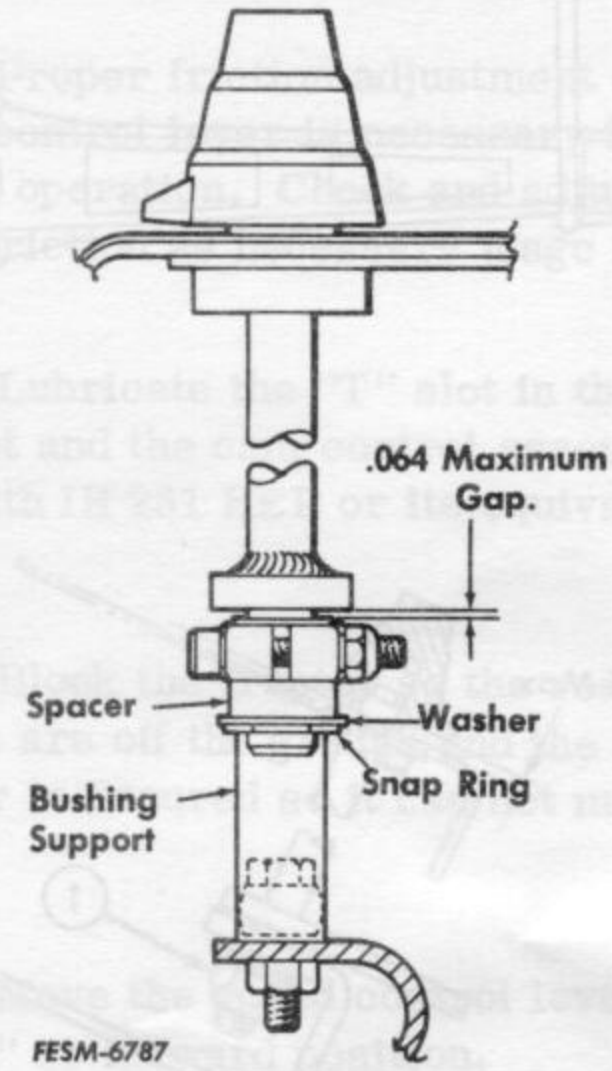

Lower Snap Ring

Models 109, 129, 149 and 169 - Below Serial No. 503725

1. Remove the frame cover.

2. Loosen the friction adjusting screw.

3. Slide the shaft up to the limit of its travel.

4. Measure the gap between the control rod arm and the friction bushing flange.

5. If the gap measures more than .064 inches, determine the number of washers (20 869 R1) required to reduce the gap to .064 inches or less.

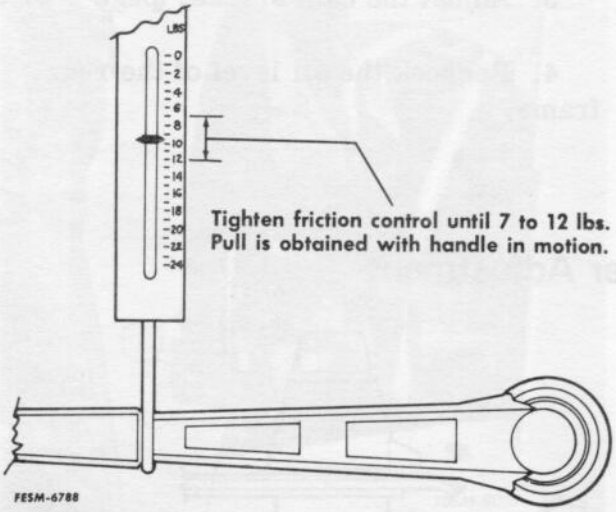

6. Remove the bushing support. Clean the lower end of the shaft and apply a light coat of grease to the lower end.

7. Install the washers as determined by step 5. Install the bushing support and torque the mounting bolts to 9-10 ft. lb.

8. Recheck the clearance to be sure the gap is correct.

9. Tighten the adjusting bolt until a pull of 7-12 pounds on a scale keeps the handle in motion.

Models 109, 129, 149 and 169 - Serial No. 503275 and above

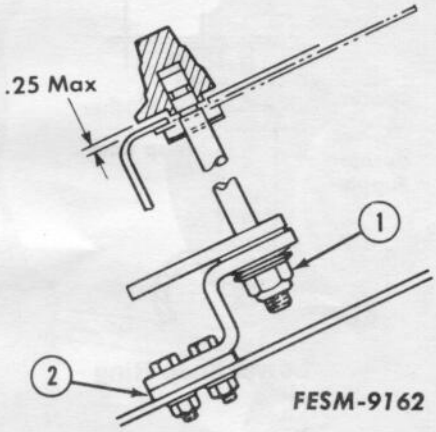

1. Tighten the friction adjustment until a pull of 7-12 pounds on a scale keeps the handle in motion.

2. Check the gap between the control handle and the instrument panel. The handle should not rub on the panel or exceed .25 inch gap. Add or remove spacers as necessary.

1. Friction adjustment
2. Spacers

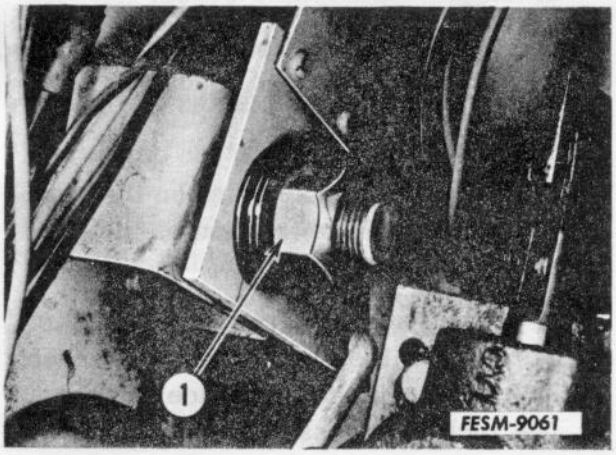

Models 1250, 1450 and 1650

1. Adjust the friction control until a pull of 7-12 pounds on a scale keeps the handle in motion.

1. Adjust here

Cam Bracket Adjustment

NOTE: The brake pedal must be properly adjusted before beginning the speed control linkage adjustment.

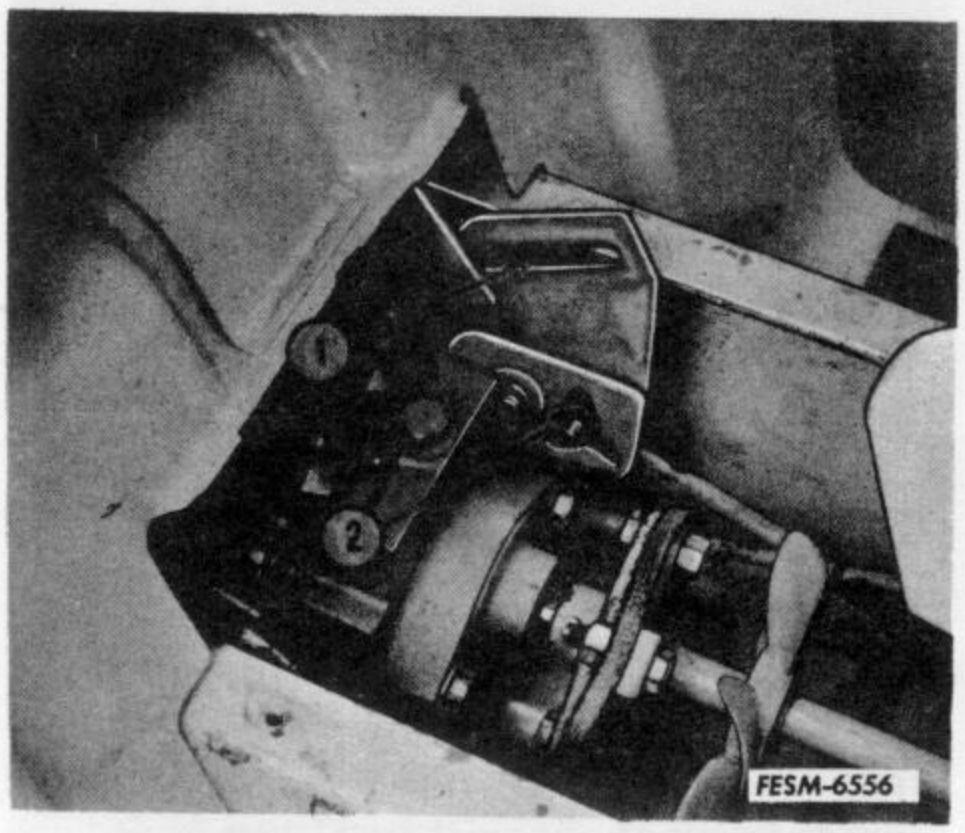

1. Cam control slot
2. "T" slot

If the tractor "creeps" in the "N" position or, if the speed control linkage has been disassembled or removed for any reason, the following adjustment must be made.

1. Proper friction adjustment on the speed control lever is necessary for proper operation. Check and adjust the lever friction as necessary (page 2-56).

2. Lubricate the "T" slot in the cam bracket and the cam control assembly slot with IH 251 HEP or its equivalent.

3. Block the tractor so the rear wheels are off the ground and the tractor is secured so it can not move.

4. Move the speed control lever to the "F" or forward position.

5. Loosen the cam bracket mounting capscrews if not previously left loose.

6. Move the cam bracket to its highest position in the slotted holes and tighten the capscrews slightly to hold it in place.

7. Start the engine and with a punch and hammer adjust the cam bracket downward until the wheels stop turning.

8. Move the speed control lever to the forward position. Depress the brake pedal and lock in place.

9. If there is excessive vibration or noise in the transmission when the brake pedal is depressed, adjust the cam bracket to eliminate the noise.

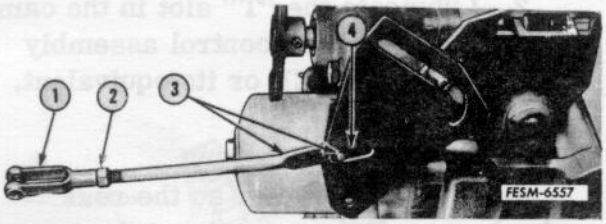

1. Clevis
2. Jam nut
3. "N" return rod
4. Speed control cam slot

10. Release the brake pedal and stop the engine.

11. Move the speed control lever to the "F" position and tighten the cam bracket capscrews.

12. With the engine running, move the speed control lever to the forward position. Depress the brake pedal all the way down and release it. The speed control lever should return to the "N" position and the wheels should stop turning.

13. If the speed control lever does not return to the "N" position, loosen the jam nut and turn the connecting rod to lengthen or shorten it until the speed control lever is in the "N" position when the brake pedal is depressed. Tighten the jam nut.

14. Check the rod in the speed control cam slot. The rod should not be touching the end of the slot when the brake pedal is fully depressed.

15. If the rod touches the end of the slot adjust as follows:

Remove the clevis end of the rod from the brake cross shaft. Loosen the jam nut and turn the clevis to lengthen the rod to prevent it from hitting the end of the slot.

16. Tighten the jam nut and install the clevis on the brake cross shaft.

Differential

Removal and Disassembly

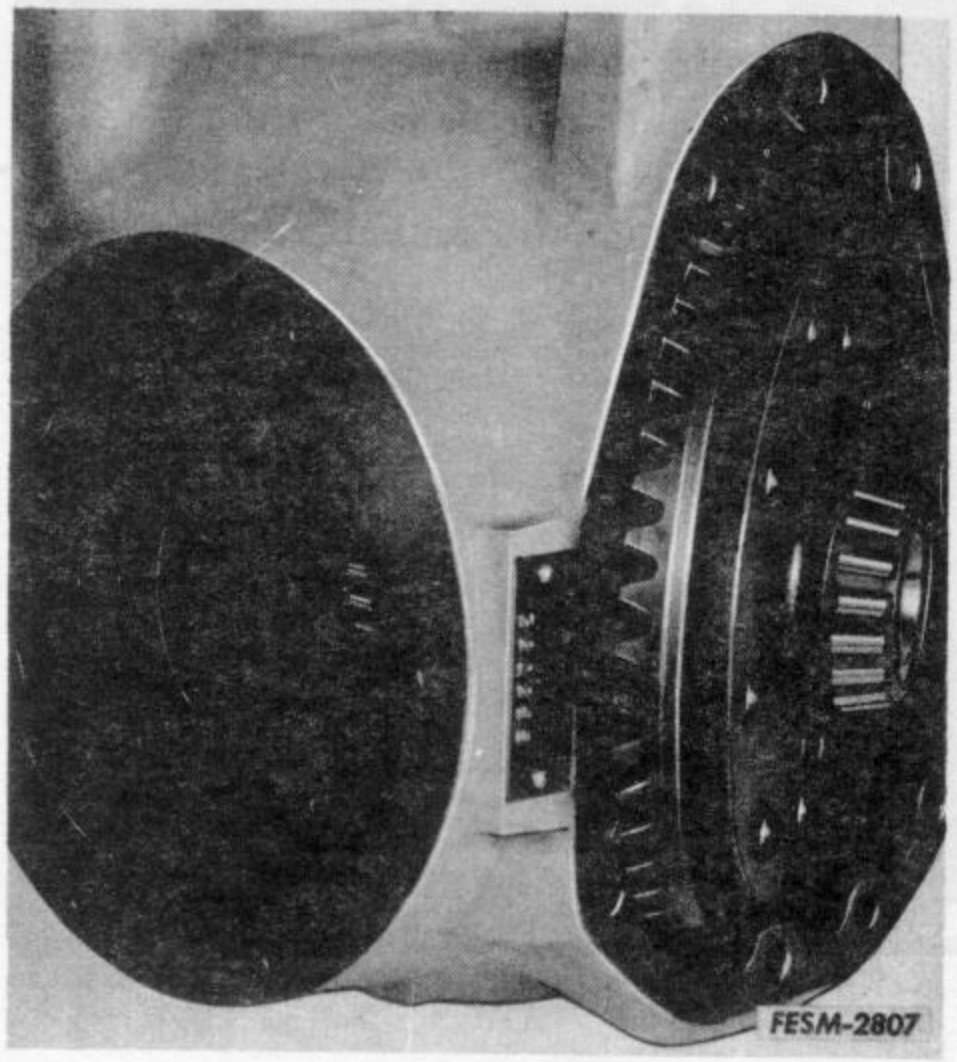

1. Drain the lubricant.

2. Split the tractor.

3. Remove the rear axles and their carriers.

4. Remove the differential carrier bearing cage and shims from each side. Keep the shims with each cage and identified for each side.

5. Turn the differential into the position shown and remove it from the transmission case. If the assembly will not clear the side of the transmission case, it will be necessary to remove one of the differential carrier bearings.

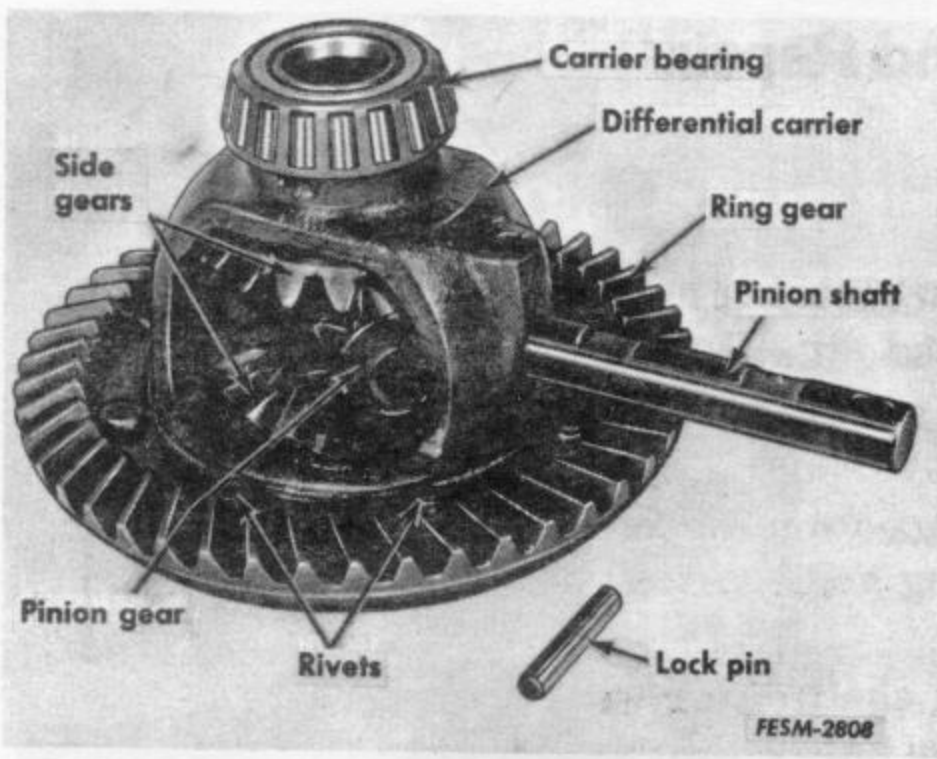

6. Drive out the pinion shaft lock pin.

7. Remove the pinion shaft.

8. Remove the pinion gears and side gears.

9. If the differential drive gear requires separate replacement, press out the eight retaining rivets.

10. Remove the bearing cones from the differential carrier if they are to be replaced.

11. Remove the bearing cups from each cage if replacement is necessary.

12. Remove the hydrostatic drive.

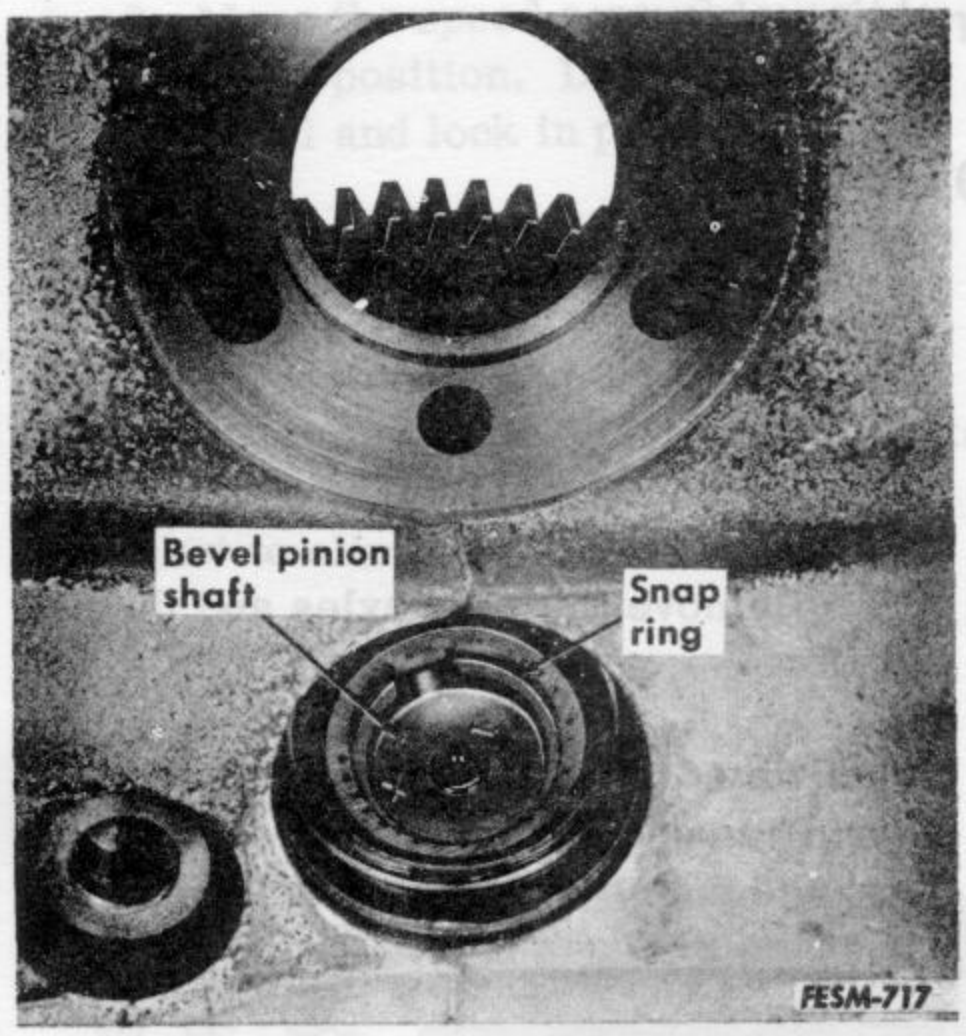

13. Remove the bevel pinion shaft expansion plug.

14. Remove the snap ring securing the bevel pinion shaft in the transmission case.

15. Using a brass drift and hammer, tap the bevel pinion shaft to the rear which will release it from the front bearing and the constant mesh gear.

Inspection and Repair

1. Wash all parts in cleaning solvent and dry with compressed air. Do not spin bearings.

2. Check all bearings for looseness, wear, roughness, pitting and scoring.

3. Check gears and shafts for wear and burrs. Remove any burrs with a fine stone.

4. Inspect the housing for cracks, restricted oil passages and dents or raised places on its machines faces. Smooth off raised places with a file.

Reassembly

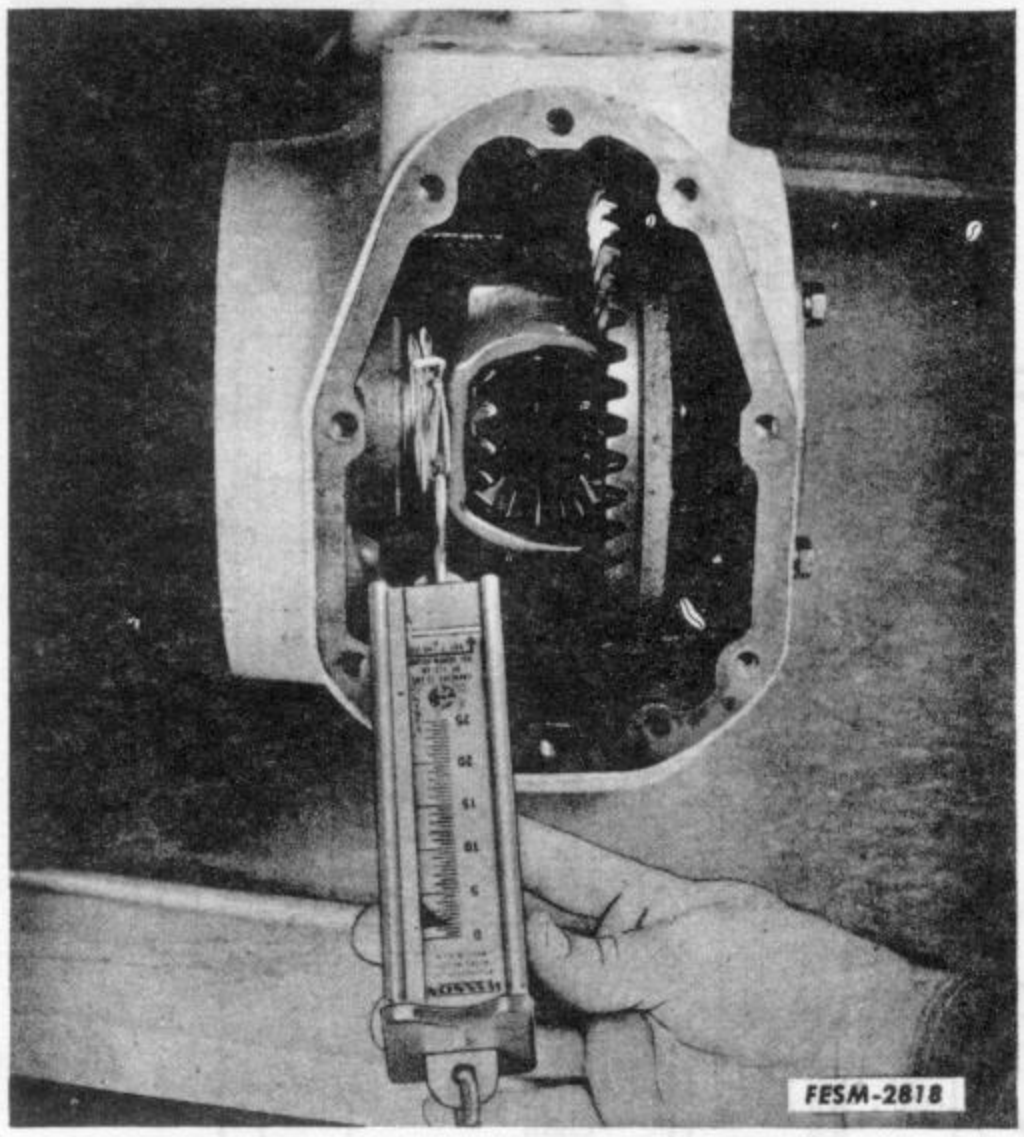

1. Assemble the differential, carrier bearings, cages and shims. Check bearing preload and adjust as necessary before replacing the bevel pinion shaft. Install or remove shims as necessary. Preload is correct when a steady pull of one to eight pounds is necessary to rotate the differential assembly.

2. Remove the differential assembly, keep the shims with the cages.

3. If the original bevel pinion shaft and transmission case is used, skip step 4.

4. If a new bevel pinion shaft, transmission case or rear bearing cup and cone are used proceed as follows:

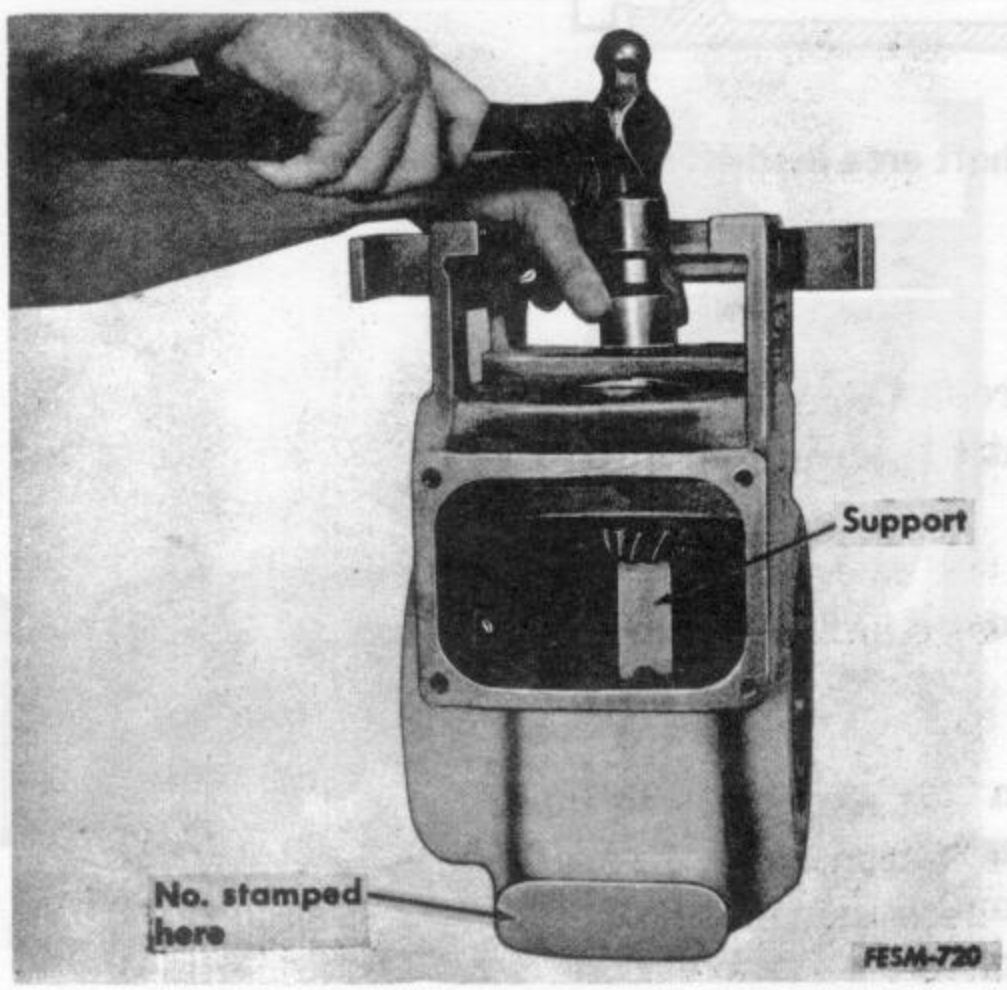

a. Take the number stamped on the case and the number stamped on the end of the bevel pinion shaft and add them together.

b. Add .015 inch.

c. Install sufficient shims, to total the figure obtained previously, in the bore for the rear bearing cup.

d. Press the cup in its bore till it bottoms against the shims.

NOTE: Shims are available in .004, .007 and .015 inch.

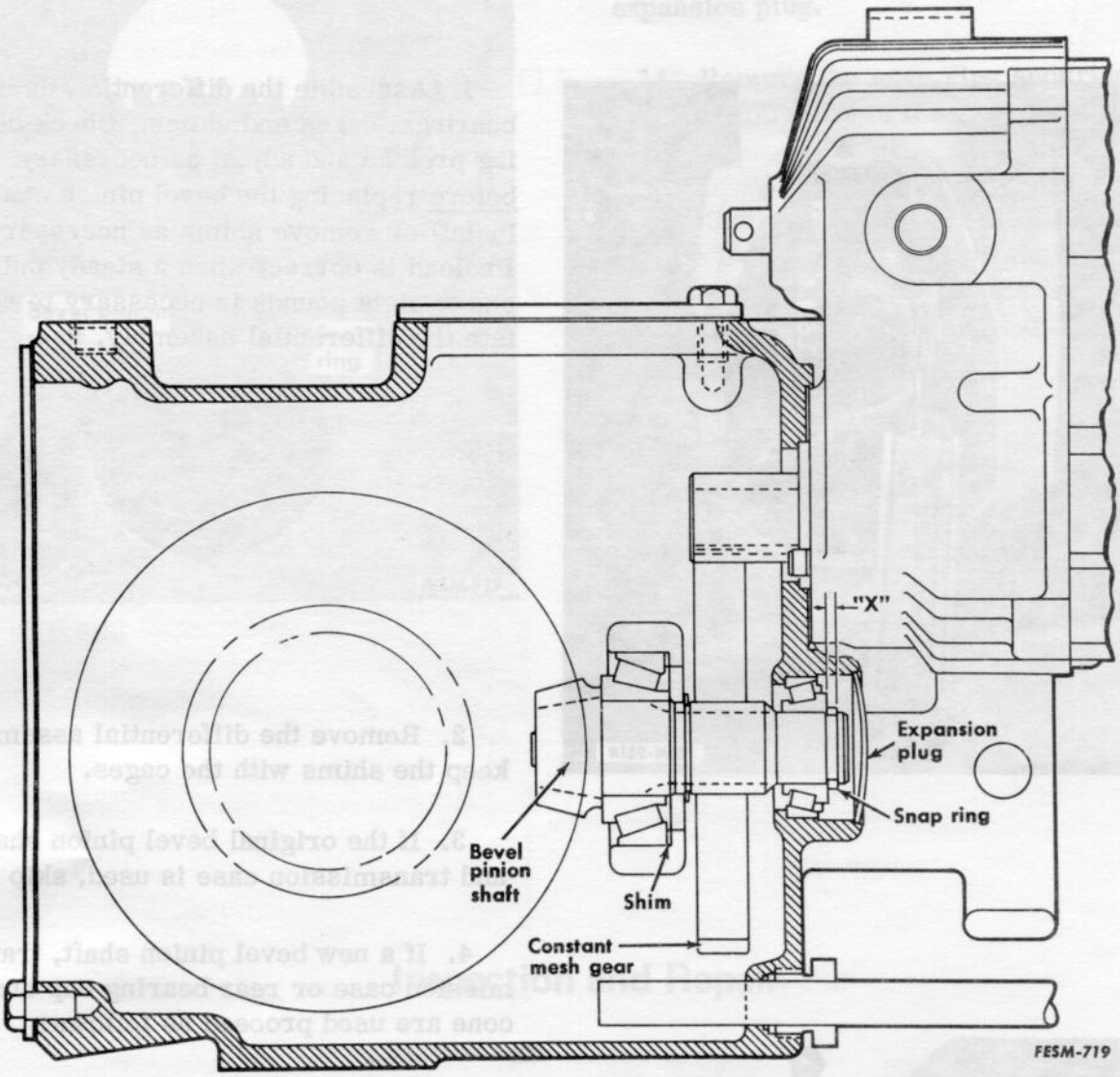

Cross section of bevel pinion shaft area in differential case.

5. If it was removed, press the rear bearing cone on the bevel pinion shaft until it bottoms against the shoulder on the shaft.

6. Install the constant mesh gear retaining ring on the pinion shaft.

7. Start the bevel pinion shaft assembly in its bore in the rear of the transmission case. Install the constant mesh gear and complete the installation of the bevel pinion shaft assembly.

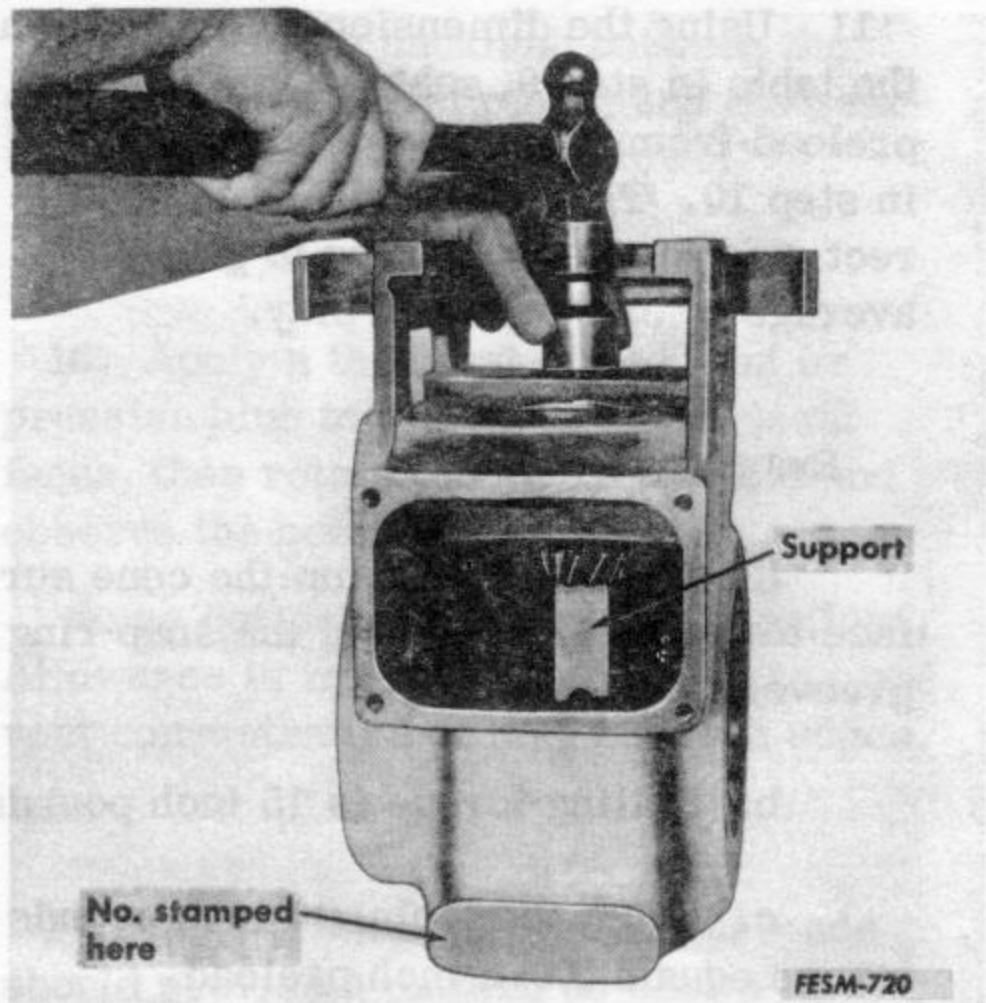

8. With the bevel pinion shaft supported at the gear end, gradually press or tap the front bearing cone onto the shaft. Rotate the shaft while installing the bearing to be sure the bearing does not get cocked or damaged. Press the bearing cone onto the shaft until the bearings are preloaded within the range of 5 inch pounds to 30 inch pounds rolling torque.

9. With the rolling torque figure obtained in step 8, refer to the table below to determine the amount of axial preload in the assembly at this time.

Rolling Torque, inch lbs.	Preload *
5	.0045
10	.0060
15	.0075
20	.0090
25	.0105
30	.0120

*The distance the bearings are telescoped beyond the desired .003 inch end play.

10. Using a feeler gauge, measure the gap between the cone surface of the front bearing to the furthest edge of the groove for the snap ring. The measurement obtained is to be considered "X".

Snap Ring Thickness Chart

Class	(inch)
A	.122 or up
B	.122 - .116
C	.116 - .110
D	.110 or under

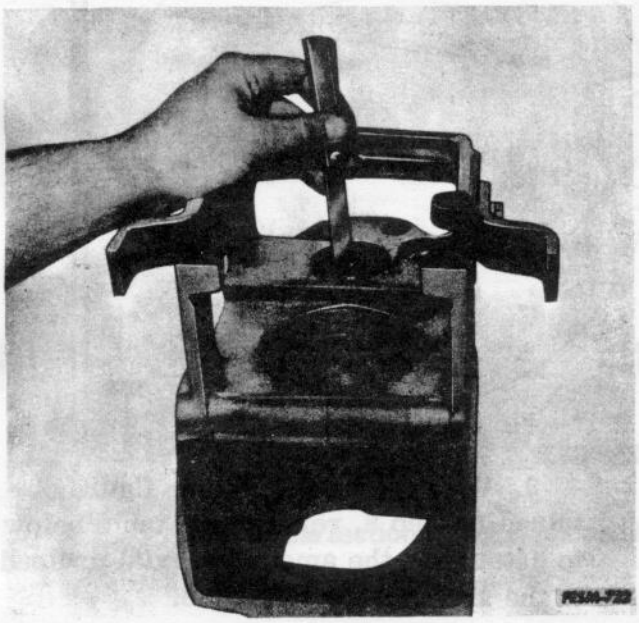

11. Using the dimension obtained from the table in step 9, subtract the value of preload from the figure obtained for "X" in step 10. This value will be the correct size for the snap ring to give an average of .003 inch end play.

Example:

a. The distance from the cone surface to the furthest side of the snap ring groove is .117 inch.

b. Rolling torque is 15 inch pounds.

c. From the table, 15 inch pounds torque equals .0075 inch preload.

d. Exact snap ring thickness should be .117 - .0075 = .1095 inch.

e. .1095 would use a class "D" snap ring.

12. Install the snap ring selected and be sure it bottoms in its groove. Tap the pinion shaft back to seat the front bearing against the snap ring.

13. Install a new expansion plug.

14. Install the differential assembly, keeping the preload shim pack correct as previously established. Drive gear must be on the right with teeth facing left.

15. Check the backlash between the drive gear and bevel pinion and the gear teeth bearing pattern as follows.

16. Apply a thin coat of red lead or prussian blue to the bevel pinion teeth faces, then rotate the gears by hand and observe the bearing pattern.

Some deflection will occur under load. Allowance is made in gear design to prevent concentration of load on teeth edges.

17. Hand testing and very light loads should provide a pattern as shown in Figure "B". When load and deflection increases the pattern will progress as in Figure "A".

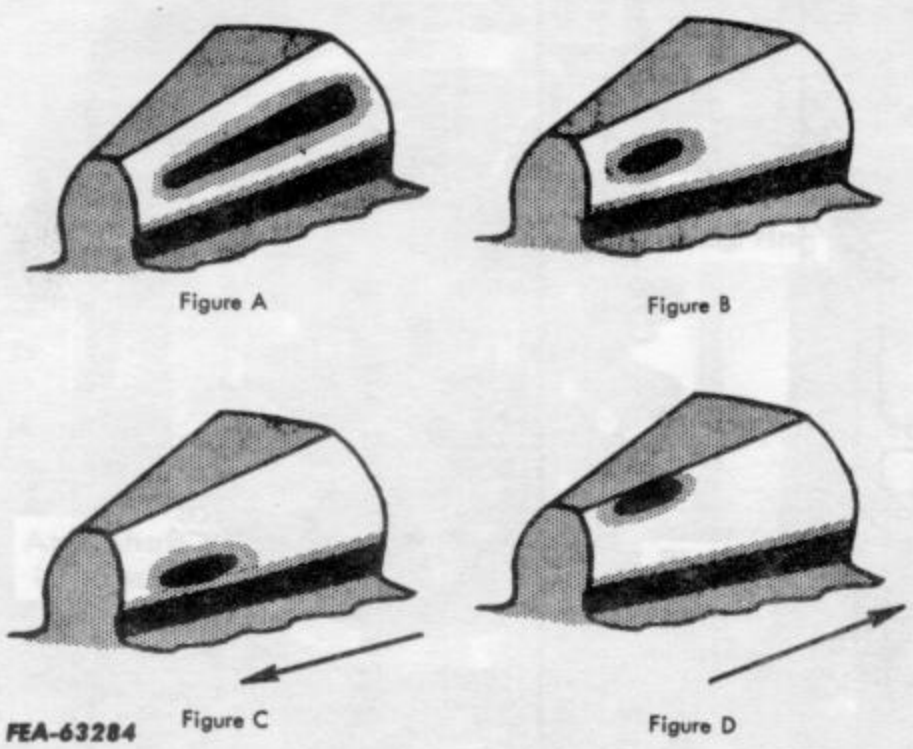

Tooth bearing pattern.

18. The desirable (no load) pattern in Figure "B" is the result of adjusting the drive gear lateral position to the specified range of .003" to .005" backlash.

19. Tooth bearing position from the root to the crown of the tooth is controlled by lateral position of the bevel pinion. If low tooth bearing on bevel pinion is indicated (as shown in Figure "C") the bevel pinion must be adjusted toward the drive gear. If high tooth bearing on the bevel pinion is indicated (as shown in Figure "D") the bevel pinion must be adjusted away from the drive gear.

NOTE: If it is necessary to move the bevel pinion in or out to correct "Root-to-crown" bearing, the drive gear must also be moved laterally to maintain the specified backlash.

20. Install the rear axles and wheels.

NOTE: The right side axle carrier mounting bolt hole located at the nine o'clock position is tapped through the differential case. The bolt installed in this hole should be coated with IH Gasketmaker to prevent oil seepage past the threads.

21. Install the hydrostatic drive.

22. Recouple the tractor.

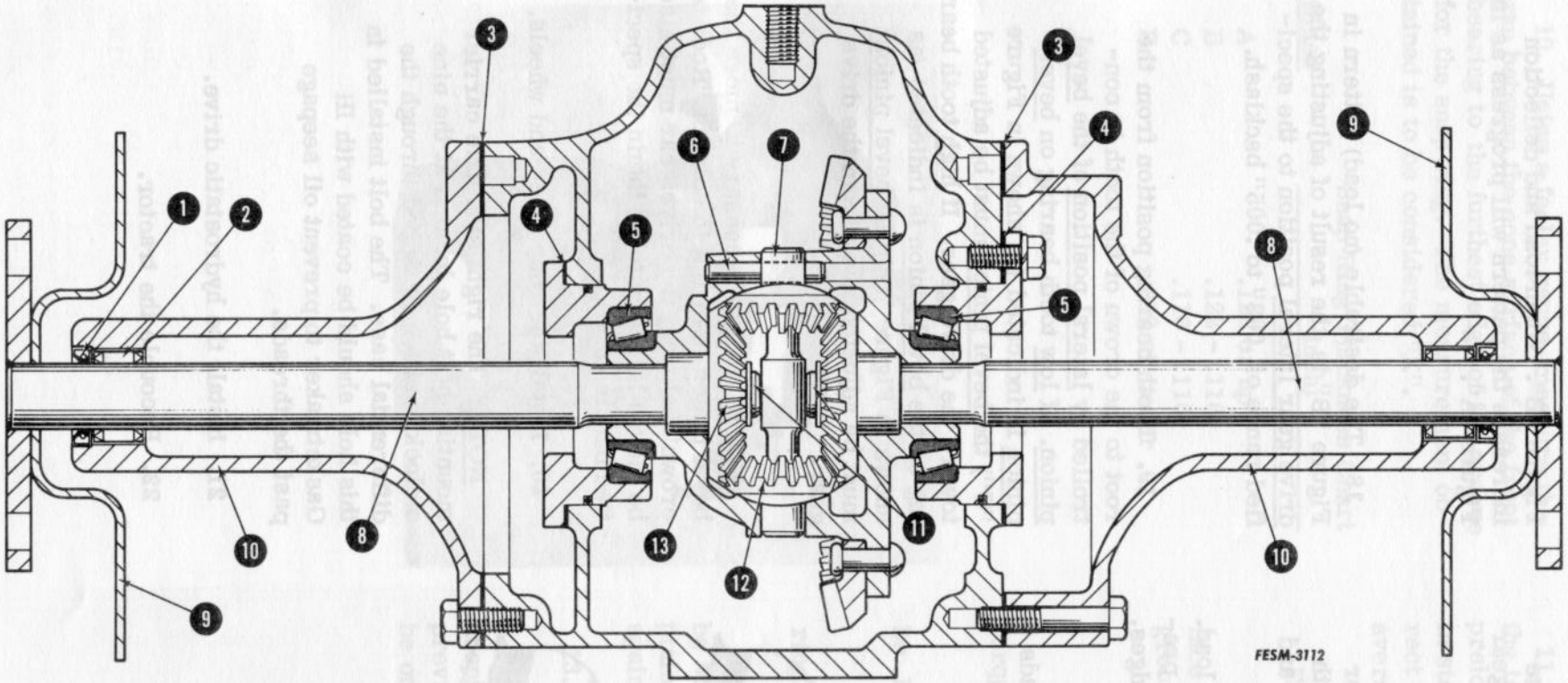

Cross section - rear axle assembly.

1. Oil seal
2. Needle bearing or bushing
3. Gaskets
4. Shims
5. Differential bearings
6. Lock pin
7. Pinion shaft
8. Rear axles
9. Brake discs
10. Rear axle carriers
11. Snap ring retainers
12. Differential pinion
13. Side gear

AXLE AND AXLE HOUSING

Disassembly

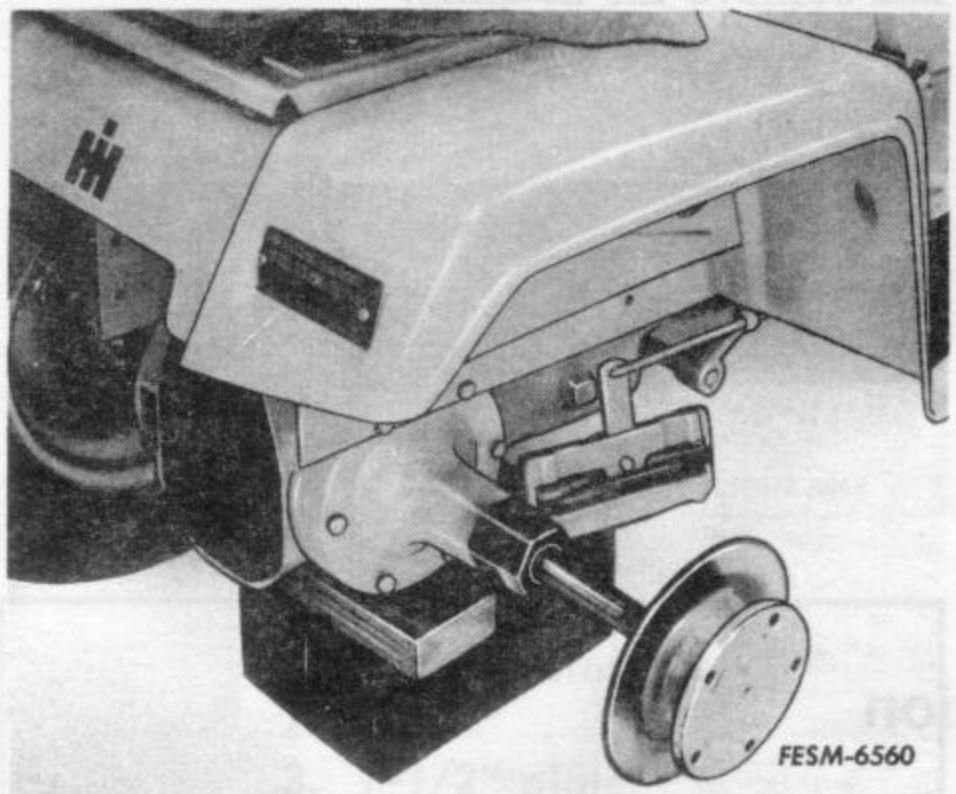

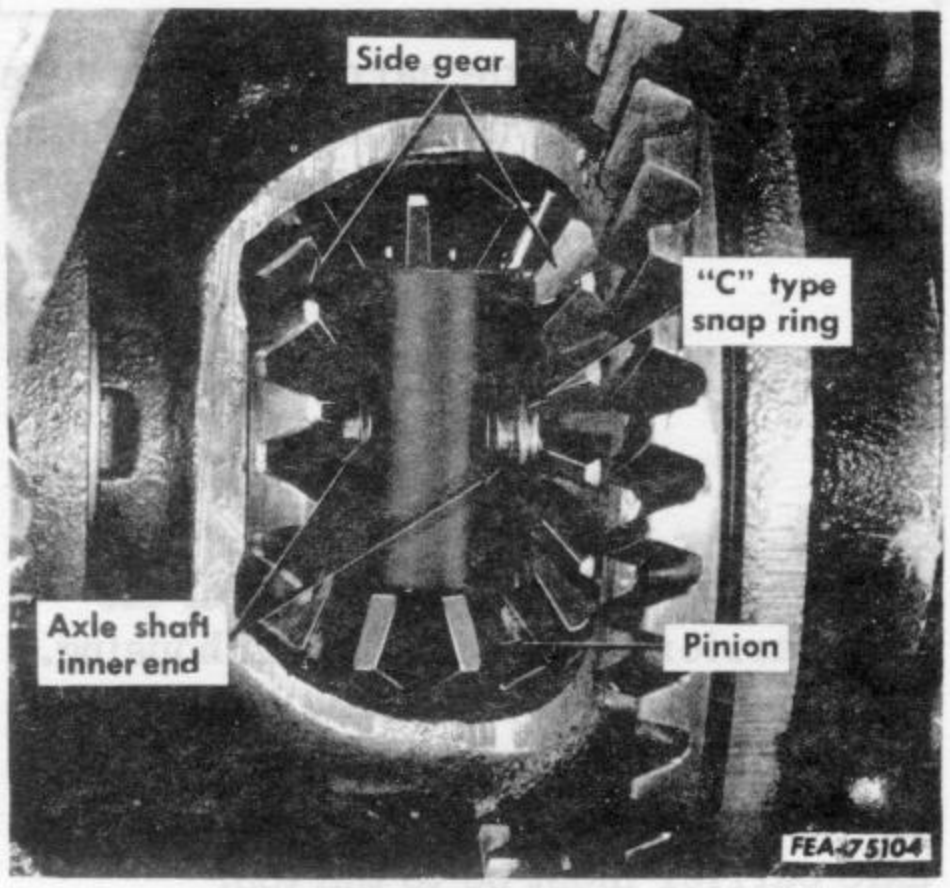

1. Raise the rear of the tractor and block securely.

2. Remove the wheel and tire.

3. Remove the brake assembly from the axle housing.

4. Place a drip pan under the rear frame housing and remove the drawbar and differential housing cover.

5. Remove the "C" type snap ring from the axle shaft and slide the axle out of the housing.

6. The axle housing outer oil seal may be removed with the axle housing on the tractor. Collapse the seal with a hammer and chisel and pry the seal from the bore. Be careful not to nick or damage the seal bore.

7. The needle bearing may be removed using a puller as shown without removing the axle housing from the tractor.

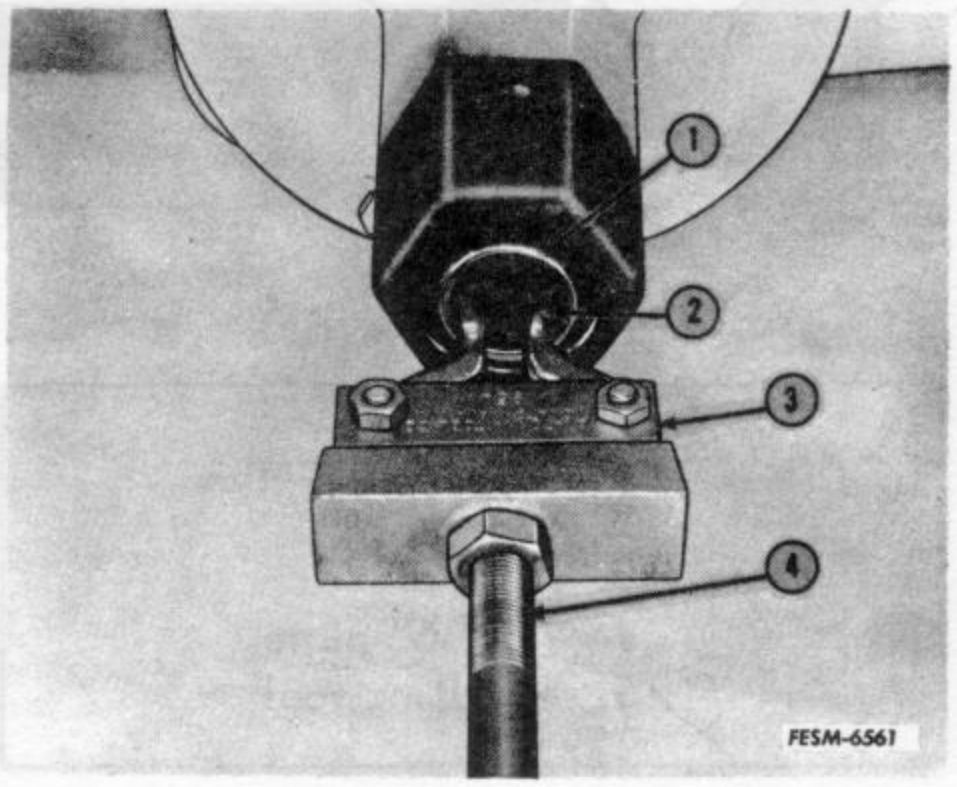

1. Bearing
2. OTC 960-8 legs
3. OTC 954 bridge
4. Slide hammer attachment

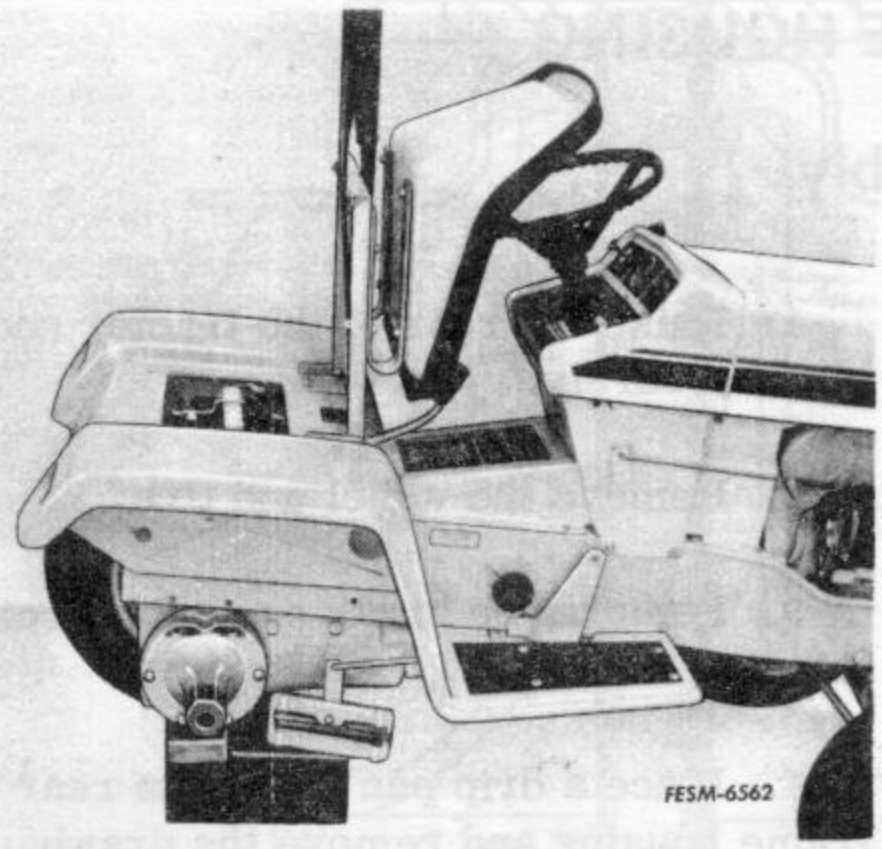

8. To remove the axle housing, remove the capscrews attaching the frame to the axle housing and reduction housing. Raise the frame clear of the axle housing and remove the housing.

Inspection

1. Inspect the axle shaft for wear at the oil seal area, bearing location and splines on the inner end.

2. Roll the axle shaft along a flat surface to detect any warping or bending.

3. Check the axle carriers for cracks or breaks. Remove any high spots from the gasket surface with a flat file.

Reassembly

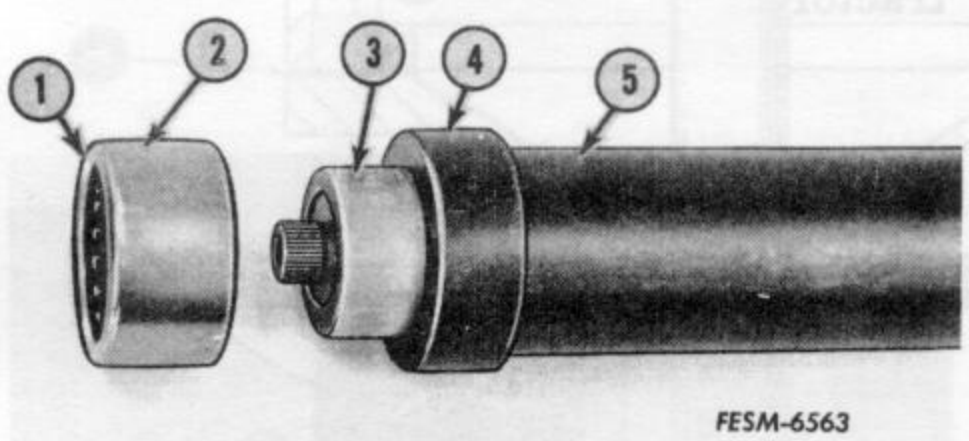

1. Chamfered end
2. Bearing
3. 1" pilot
4. 1-7/16" plate
5. Installing tool

1. Using a new gasket, install the axle carrier to the differential housing. Capscrew threads should be coated with a non-hardening sealer (permatex) to avoid oil leaks. The frame pad of the axle carrier must be to the top.

2. Install the needle bearing into the housing with a suitable tool as shown. One side of the bearing is chamfered to aid in installation. Install the bearing flush with the outer edge of its bore.

3. Install the seal with a suitable tool as shown. Fill the cavity between the lips of the oil seal with IH 251 HEP or its equivalent before installing the seal.

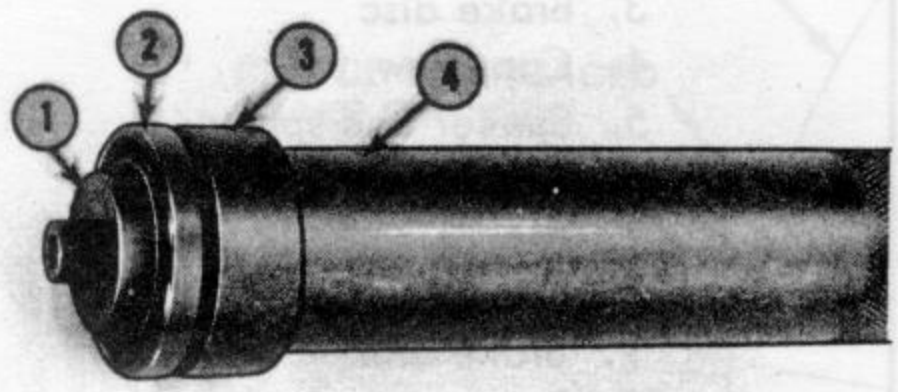

FESM-6564

1. 15/16" pilot
2. Seal
3. 1-1/2" plate
4. Installing tool

4. Lubricate the axle shaft and bushing then slide the shaft through the seal, bushing, carrier and differential side gear. Rotate the axle as it is pushed through to avoid damage to the seal. Wipe off excess lubricant.

5. Install a new "C" type snap ring to the inner end of the axle shaft.

6. Replace the rear cover and drawbar.

7. Install the brake assemblies on the outer ends of the axle carriers.

8. Install the wheel.

9. Fill differential housing to specified level with Hy-Tran or its equivalent.

EXTERNAL BRAKES

Removal

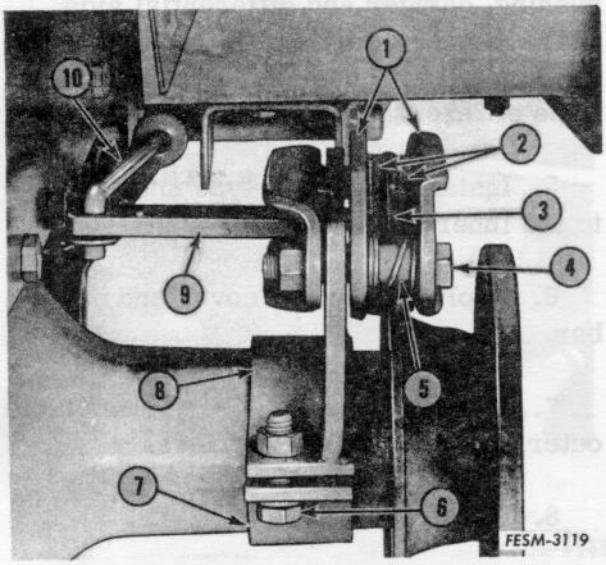

Brake assembly with wheel removed for ease of viewing.

1. Caliper assembly
2. Brake pads
3. Brake disc
4. Capscrew
5. Spacer and spring
6. Capscrew
7. Mounting flange
8. Bracket assembly
9. Brake arm
10. Brake rod

1. Remove the brake rod (10) from the brake arm (9).

2. Remove the capscrews (6) from the mounting flange (7) and remove the brake assembly from the axle carrier.

3. Remove the capscrews (4) securing the caliper assembly (1) to the bracket assembly (8).

Inspection and Repair

1. Inspect the control rods and levers for wear at their connecting pivot points.

2. Inspect the brake pads for excessive wear. Replace if necessary.

3. Check the brake discs for excessive wear or damage.

4. Check the pedal return spring ends for wear.

Installation

1. Assemble the caliper assembly to the bracket assembly. Be sure to install the spacers and springs (5) as shown in illustration.

2. Install the caliper assembly and bracket assembly on the disc and axle carrier.

3. Assemble the mounting flange to the bracket assembly and secure with the capscrews.

4. Install the brake rods in the brake arms.

Adjustment – Standard Transmission

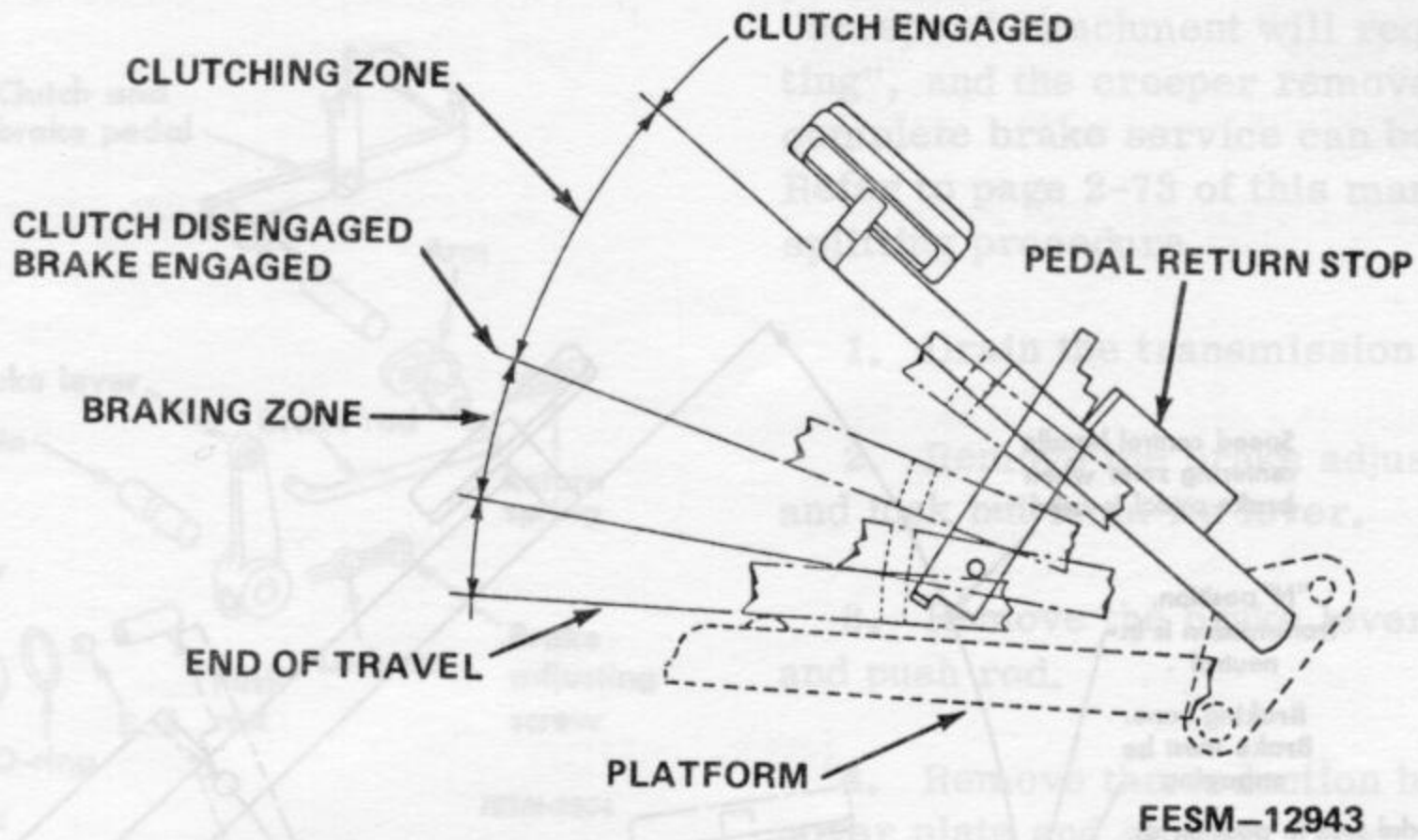

The disc brakes should engage when the pedal is pressed down to within a maximum of 1-3/16-inches and a minimum of 3/4-inch above the platform.

It may be possible to push the pedal all the way down to the platform, but this is of no concern as long as the brake is fully engaged when the pedal arm is at least 3/4-inch above the platform.

NOTE: The brakes must not engage before the pedal is within the maximum distance of 1-3/16-inches, top of the braking zone.

To adjust the brakes, block the front wheels securely and raise the tractor so the rear wheels are off the ground and turn freely. Tractor must be in neutral.

Disconnect the left brake rod at the pinned end, rotate the right wheel by hand and adjust the jam nuts on the brake rod until wheel brakes firmly. Then, disconnect the right brake rod at the pinned end and reconnect the left brake rod. Turn the left wheel by hand and adjust the jam nuts until the wheel brakes firmly. Reconnect the right rod.

NOTE: To check the equalization of the brakes start the engine and shift the gears to third speed. After the wheels are turning apply the brakes. Both wheels should stop at the same time. If one wheel stops and the other wheel continues to revolve when the brakes are applied, stop the engine, adjust the jam nuts on the brake rod of the wheel that does not stop, enough so that both wheels stop simultaneously.

Adjustment – Hydrostatic Drive

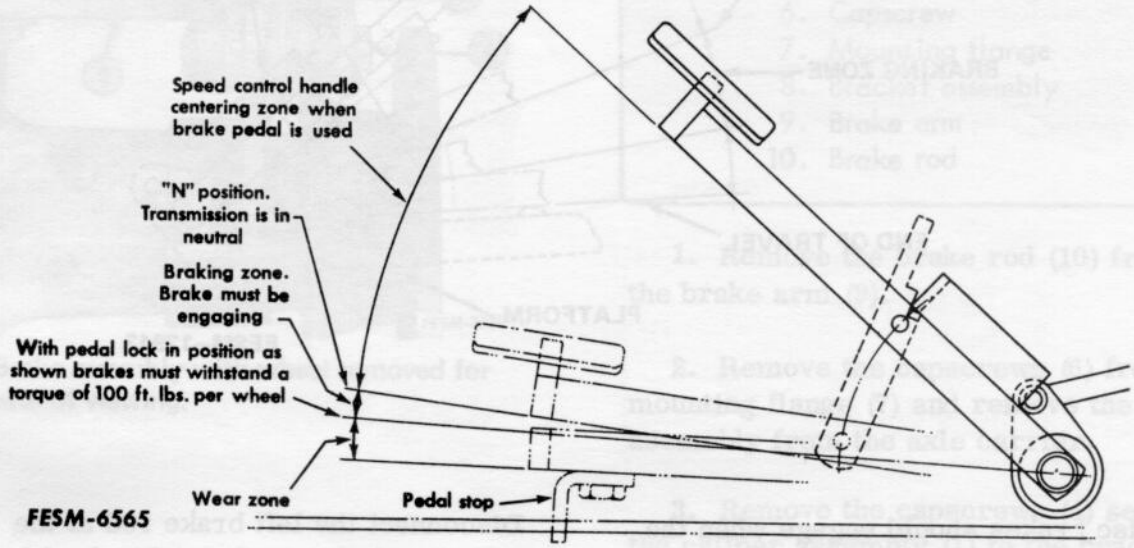

The disc brakes should engage when the pedal is pressed down to within a maximum of 1-3/16-inches and a minimum of 3/4-inch above the pedal stop.

The brake is engaged when the pedal arm is at least 3/4-inch above the pedal stop.

To adjust the brakes block the front wheels securely and raise the tractor so the rear wheels are off the ground.

NOTE: The brakes must not engage before the pedal is within the maximum distance of 1-3/16-inches.

With the rear wheels off the ground and the brake pedal in the locked position, the brake settings should be equalized as follows:

Disconnect left brake rod at the pinned end, rotate the right wheel by hand and adjust the jam nuts on the brake rod until the wheel brakes firmly. Then, disconnect the right brake rod at the pinned end and reconnect the left brake rod. Turn the left wheel by hand and adjust the jam nuts until the wheel brakes firmly. Reconnect the right rod.

INTERNAL BRAKES

Removal — Standard Transmission

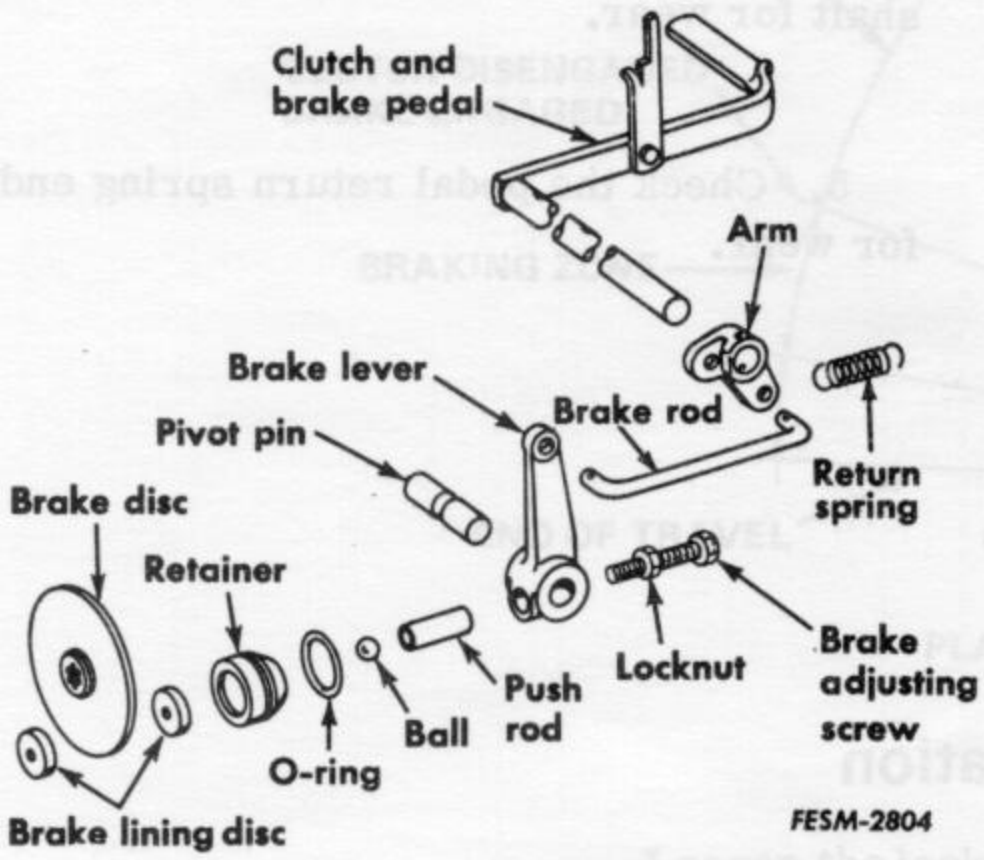

NOTE: Tractors equipped with a "creeper" attachment will require "splitting", and the creeper removed before complete brake service can be performed. Refer to page 2-73 of this manual for splitting procedure.

1. Drain the transmission lubricant.

2. Remove the brake adjusting screw and lock nut from its lever.

3. Remove the brake lever, pivot pin and push rod.

4. Remove the reduction housing front cover plate and slide it forward on the clutch shaft. Also see "Note" above.

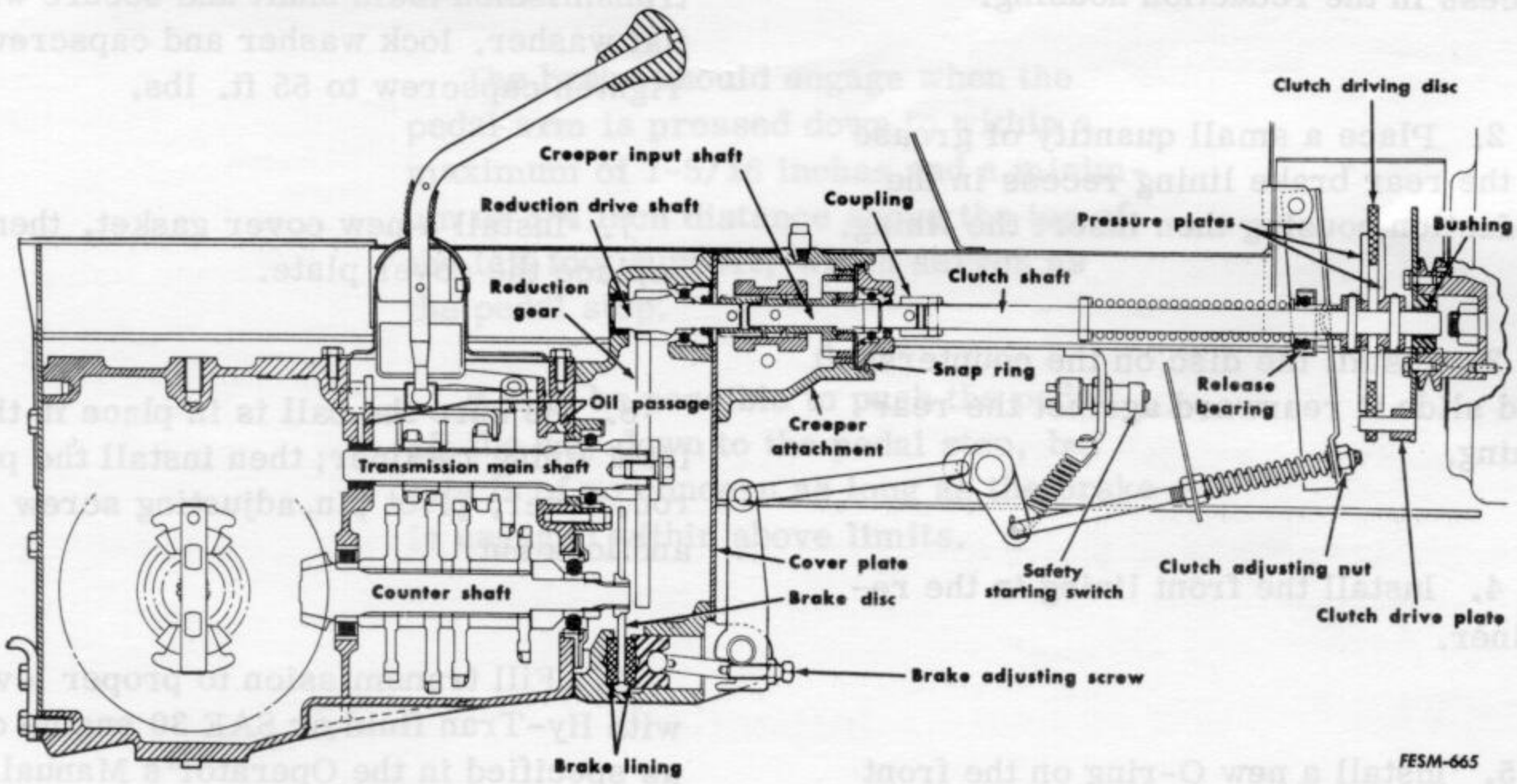

5. Remove the reduction gear from the front of the transmission main shaft.

6. Move the gear upward and the bottom of the gear forward to clean the cover screw bosses as the gear is lifted from the housing.

7. Slide the brake disc forward on the countershaft as the front lining and retainer are moved forward in their bore.

NOTE: Both linings and the disc can be removed without removing the front lining retainer; however, removal of the retainer is recommended for inspection and replacement of the retainer O-ring.

Inspection

1. Inspect the control rods and levers for wear at their connecting pivot points.

2. Inspect the linings and disc for wear.

3. Inspect the disc hub splines for wear.

4. Check the splines on the countershaft for wear.

5. Check the pedal return spring ends for wear.

Installation

1. Clean the brake cavity and lining recess in the reduction housing.

2. Place a small quantity of grease in the rear brake lining recess in the reduction housing then insert the lining.

3. Install the disc on the countershaft and slide it rearward against the rear lining.

4. Install the front lining in the retainer.

5. Install a new O-ring on the front lining retainer, lubricate the retainer and O-ring then push them into the retainer bore in the reduction housing.

6. Install the reduction gear on the transmission main shaft and secure with flat washer, lock washer and capscrew. Tighten capscrew to 55 ft. lbs.

7. Install a new cover gasket, then replace the cover plate.

8. Be sure the ball is in place in the front lining retainer; then install the push rod, lever, pivot pin, adjusting screw and lock nut.

9. Fill transmission to proper level with Hy-Tran fluid or SAE 30 engine oil as specified in the Operator's Manual.

Adjustment – Standard Transmission

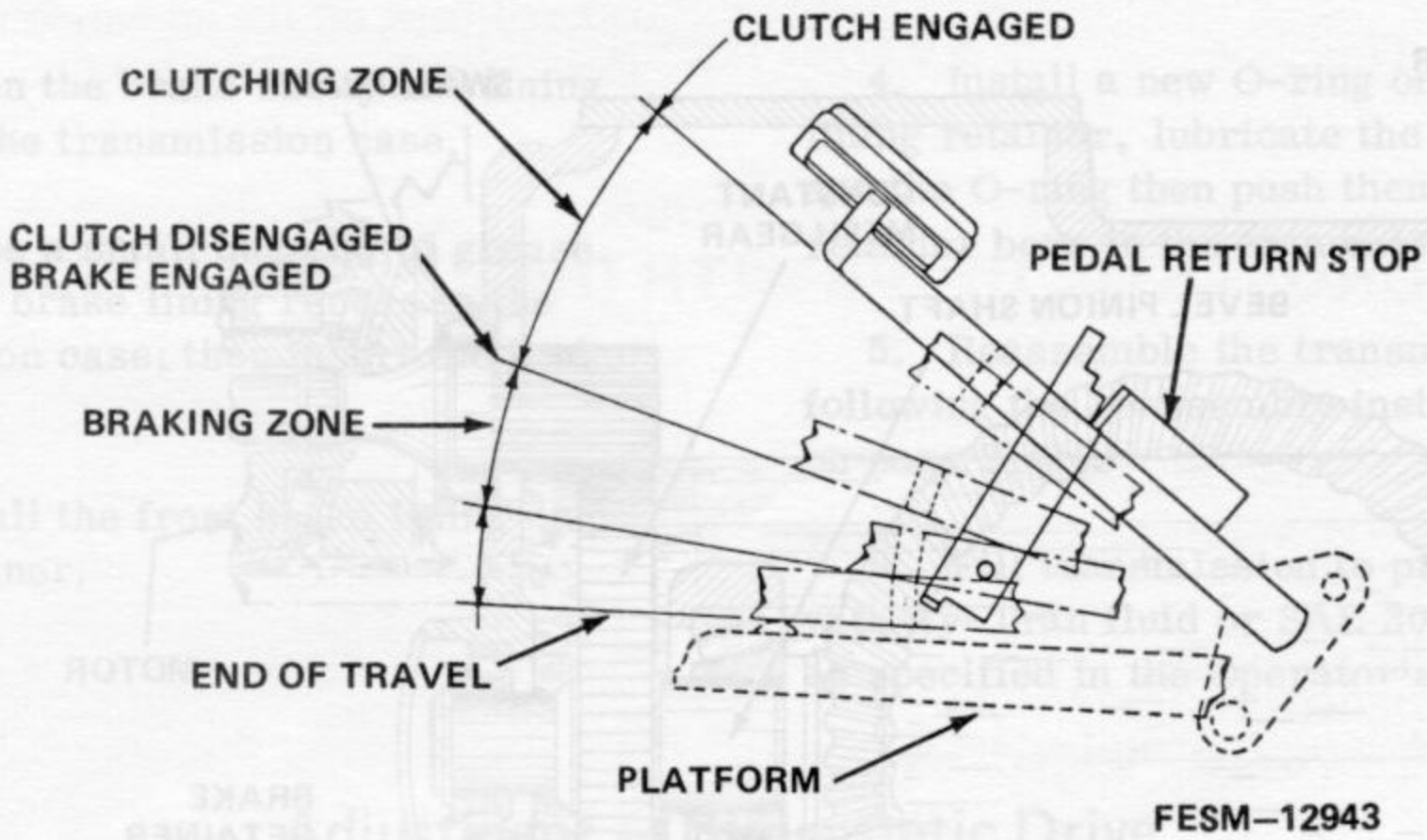

Loosen the lock nut and turn the brake lever adjusting screw in or out as required.

The brake should engage when the pedal arm is pressed down to within a maximum of 1-5/16 inches and a minimum of 3/4 inch distance above the top of the left foot support, which serves as the pedal stop.

It may be possible to push the pedal all the way down to the pedal stop, but this is of no concern as long as the brake is engaged within above limits.

Removal — Hydrostatic Drive

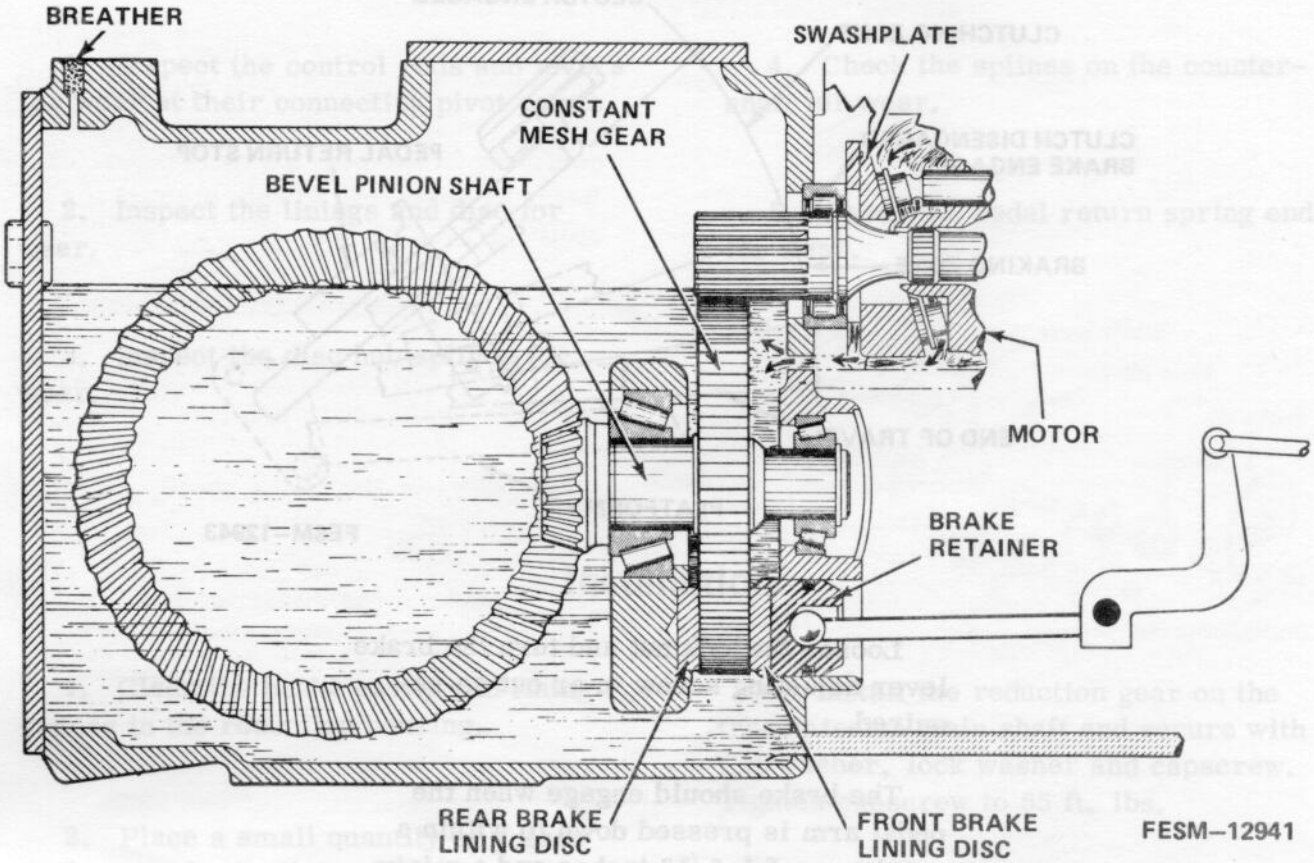

1. Drain the lubricant.

2. Split the tractor.

3. Remove the differential.

4. Remove the bevel pinion shaft and constant mesh gear.

5. Remove the rear brake lining disc.

6. Remove the brake retainer by pushing it out of the housing forward.

7. Remove the brake lining disc from the retainer.

Inspection

1. Inspect the control rods and levers for wear at their connecting pivot points.

2. Inspect the brake ;ining disc and the constant mesh gear for wear.

3. Check the pedal return spring ends for wear.

Installation

1. Clean the brake cavity and lining recess in the transmission case.

2. Place a small quantity of grease in the rear brake lining recess in the transmission case; then insert the brake lining disc.

3. Install the front brake lining disc in the retainer.

4. Install a new O-ring on the front lining retainer, lubricate the retainer and the O-ring then push them into the retainer bore in the transmission case.

5. Reassemble the transmission case following the reassembly instructions on page 2-61.

6. Fill transmission to proper level with Hy-Tran fluid or SAE 30 engine oil as specified in the Operator's Manual.

Adjustment – Hydrostatic Drive

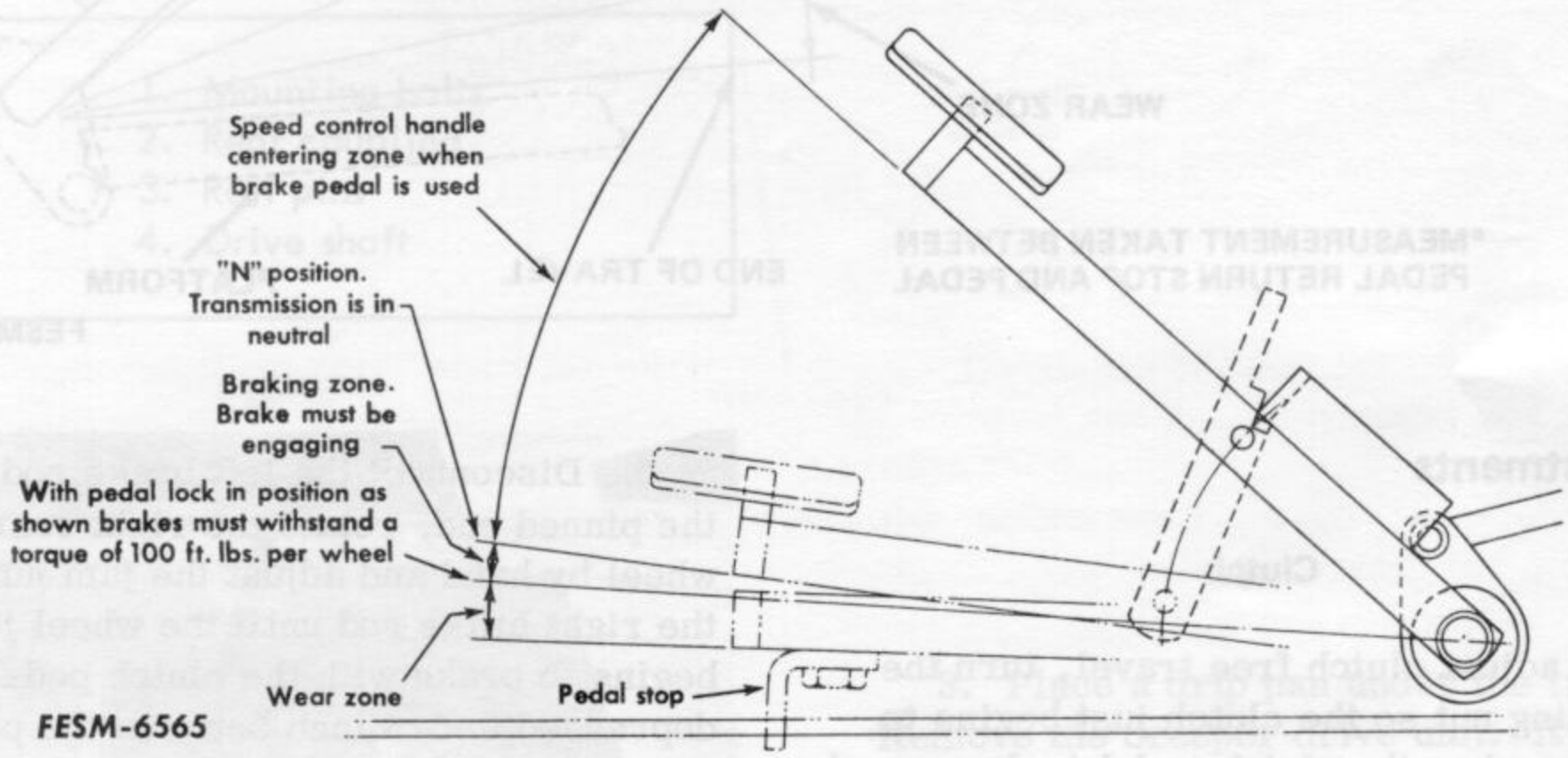

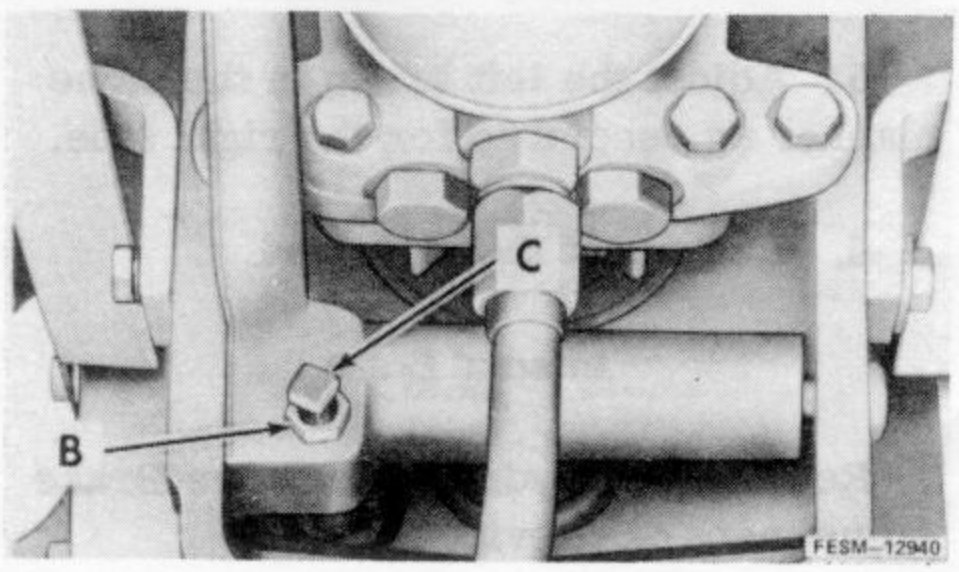

1. Block the front tires and support the rear end so one rear tire is off the ground and free to turn.

2. Place the brake pedal in the up position.

3. Loosen the jam nut "B". Then tighten the brake lever adjusting screw "C" until finger tight (8-10 inch pounds). Retighten the jam nut "B" while holding the adjusting screw "C".

4. Actuate the brake pedal through a full stroke at least one time.

5. Repeat step 3.

6. If the brake drags with the brake pedal in the up position, loosen the jam nut and back off the adjusting screw slightly and retighten the jam nut.

HYDROSTATIC DRIVE WITH DISCONNECT PACKAGE

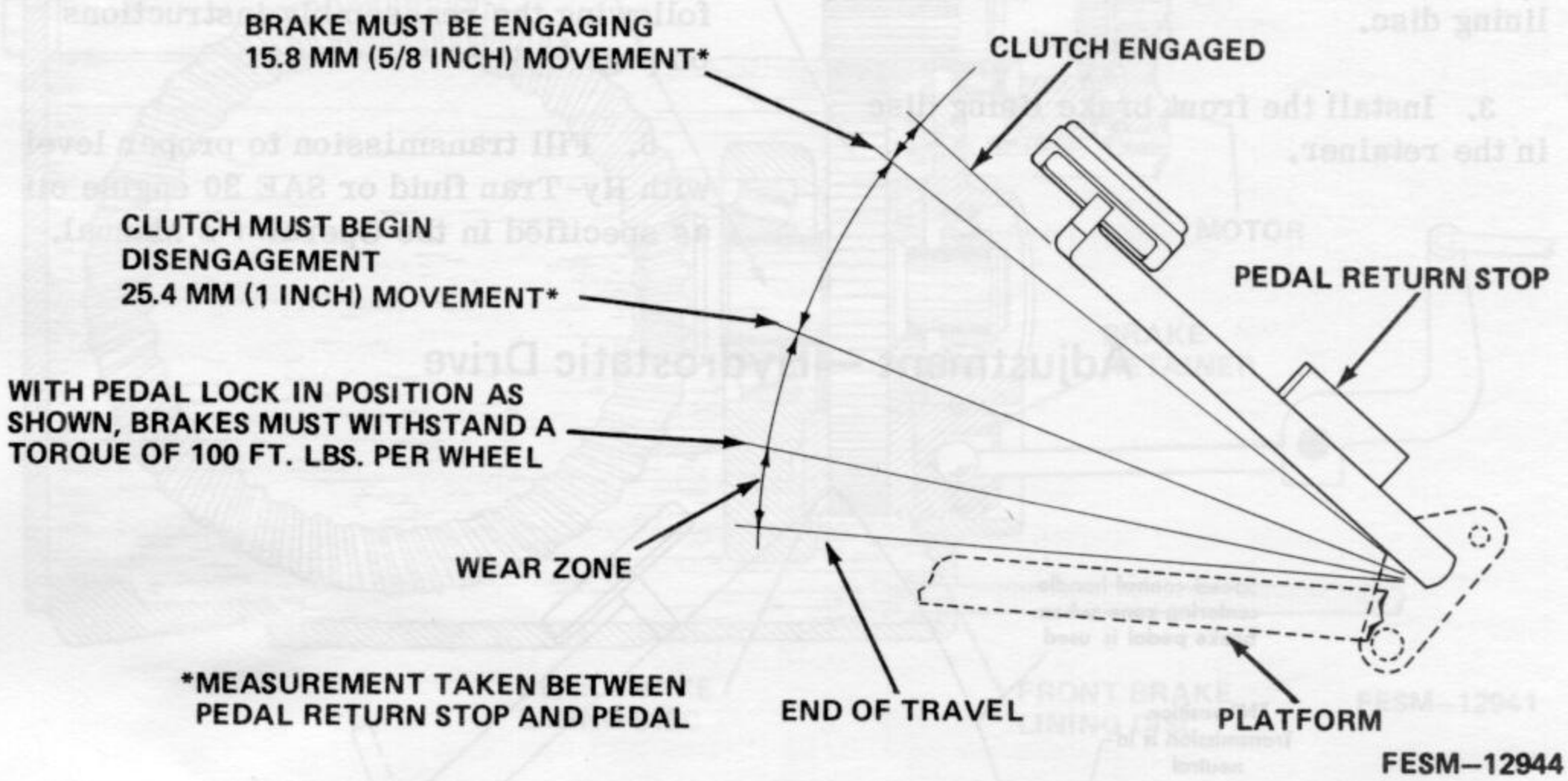

Adjustments

Clutch

To adjust clutch free travel, turn the adjusting nut so the clutch just begins to release when the clutch pedal is depressed one inch.

The one inch dimension is measured at the point of contact between the clutch pedal and the front of the pedal return stop.

External Brake

1. Adjust the clutch.

2. Block the front wheels securely and raise the tractor so the rear wheels are off the ground.

3. Disconnect the left brake rod at the pinned end, rotate the right rear wheel by hand and adjust the jam nut on the right brake rod until the wheel just begins to brake with the clutch pedal depressed to 5/8 inch between the pedal arm and the pedal return stop.

4. Disconnect the right brake rod at the pinned end and reconnect the left brake rod.

5. Adjust the left brake in the same manner as described for the right side.

6. Reconnect the right rod.

Internal Brake

Refer to the Hydrostatic Drive Brake Adjustment on previous page.

CREEPER DRIVE

Removal

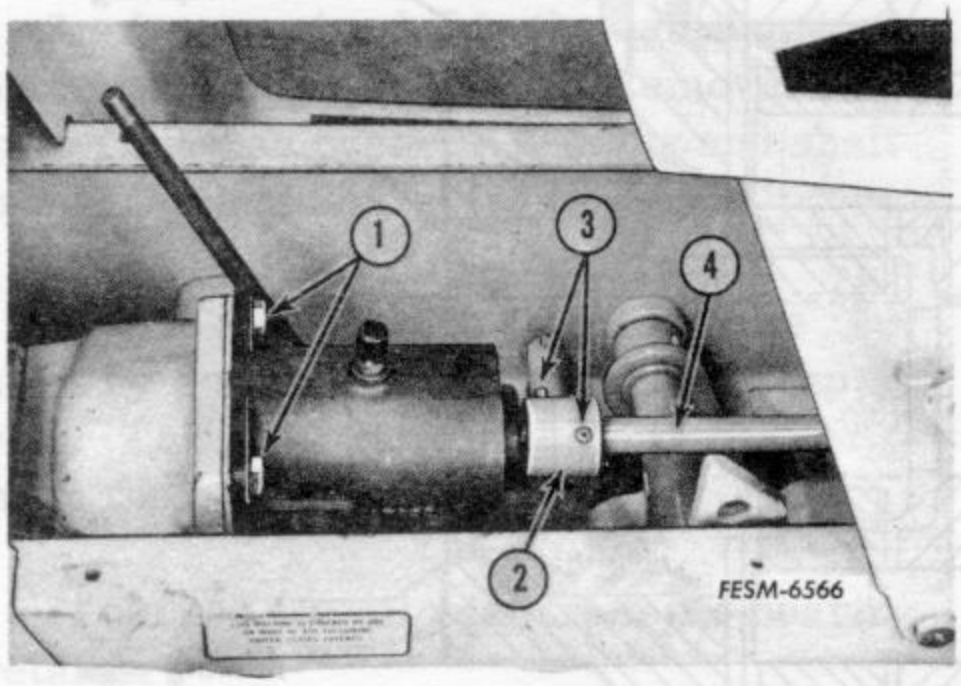

1. Mounting bolts
2. Rear coupling
3. Roll pins
4. Drive shaft

1. Remove the frame cover.

2. Drive out the roll pins from the rear coupling and slide the coupling forward.

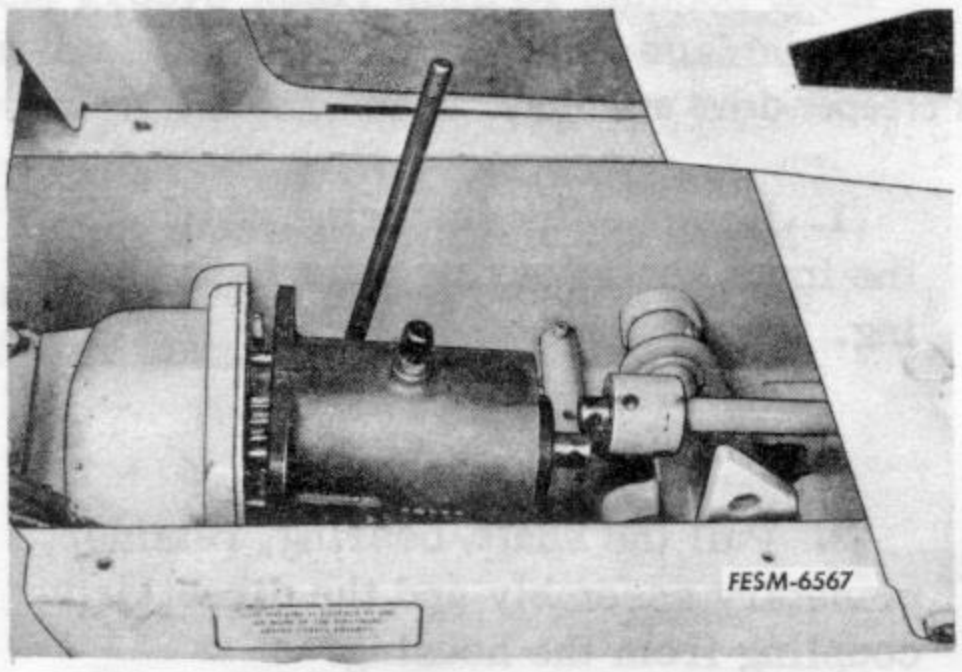

3. Place a drip pan under the tractor. Remove the creeper drive unit. It may be necessary to bump the creeper unit to the side to loosen the housing from its gasket and dowels. The drive shaft will have to be pushed to the side slightly to allow the unit to slide off.

Disassembly

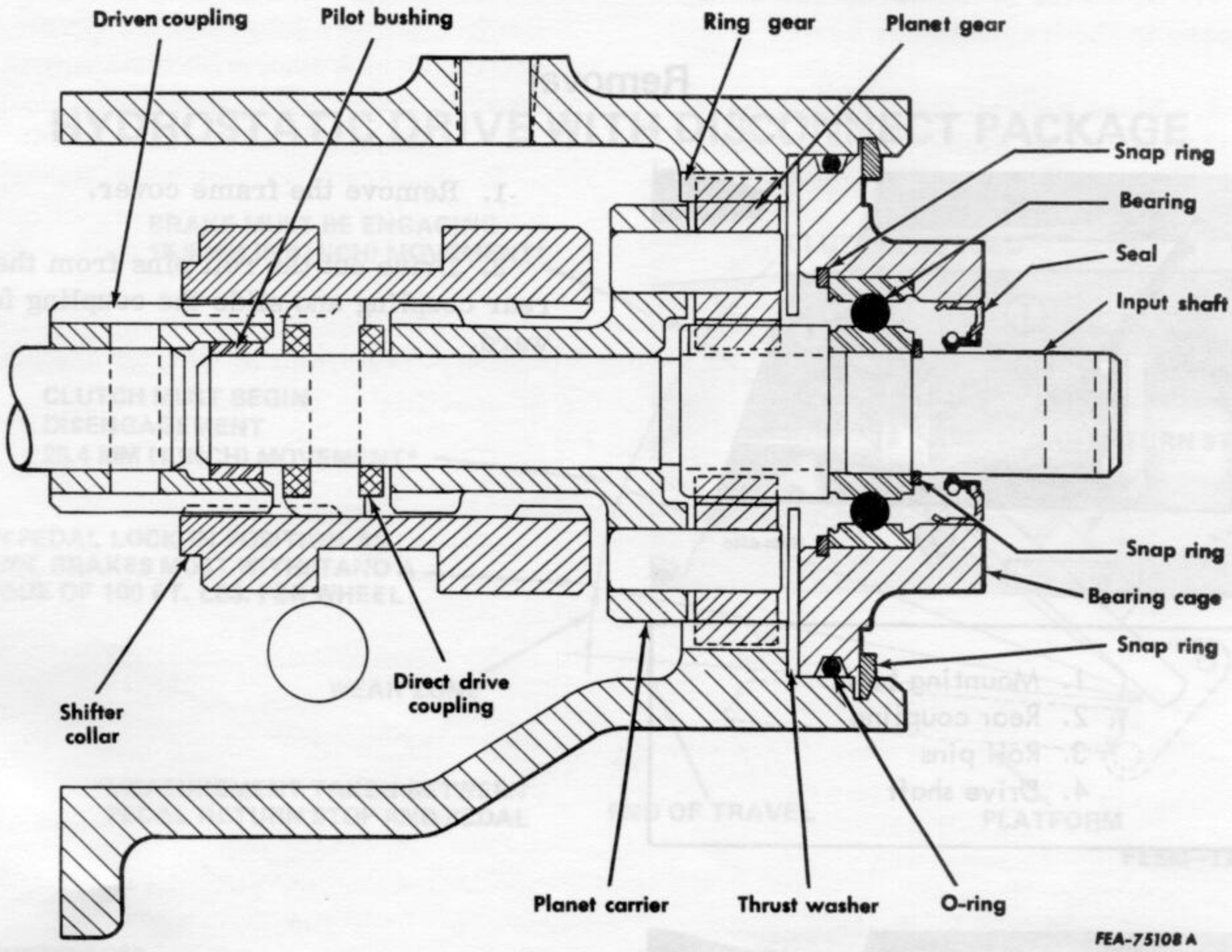

Cross section - side view of creeper drive assembly.

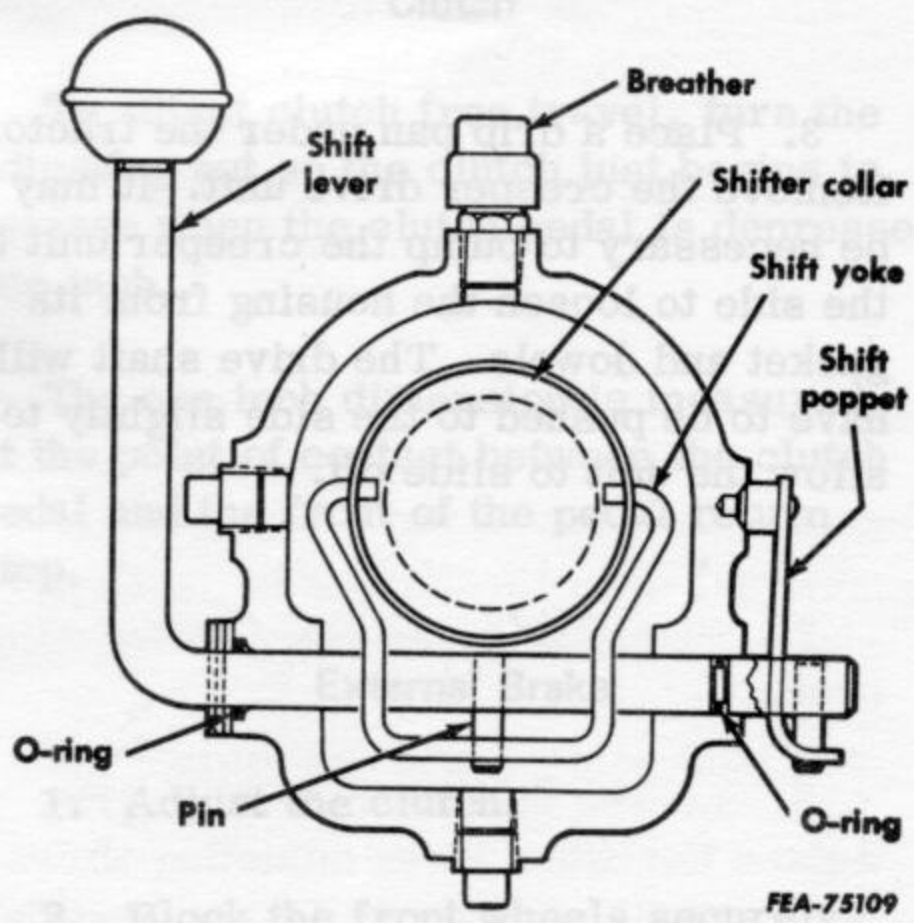

Cross section - end view of creeper shifting components.

1. Remove the snap ring which holds the input shaft bearing cage in the housing.

2. Pull the shaft, bearing, retainer, planetary assembly and the direct drive coupling from the housing.

NOTE: The spline grooves of the direct drive coupling must align with the splines of the shifter collar.

3. Support the drive coupling and drive the coiled spring pin out. Remove the coupling from the shaft.

4. Slide the planet carrier off the input shaft and the planet gears off the carrier pins.

5. Remove the flat thrust washer.

6. A snap ring holds the ball bearing outer race in the retainer. Remove the snap ring then push the bearing and shaft from the retainer.

7. The ball bearing is held on the shaft by a snap ring. Remove the snap ring. The shaft can now be pressed from the bearing.

8. Press the oil seal from the bearing retainer.

9. Drive the shift poppet pin from the shaft and remove the poppet.

10. Shift the lever and shifter collar toward the rear of the case and at the same time lift the shifter collar up to disengage it from the shift yoke.

11. Drive the pin out of the shift yoke and lever shaft.

12. Slide the lever shaft from the yoke and housing.

13. Remove the O-rings from the shaft, housing and bearing retainer.

14. Wash all parts in cleaning solvent then dry thoroughly.

Inspection and Repair

1. Check the input drive shaft for oil seal groove wear, worn or chipped teeth on the integral gear and pilot bushing wear on the rear end.

2. Check the splines of the direct drive coupling, planet carrier and the shifter collar for wear and chipping.

3. Check the housing for cracks and the integral sun gear for wear and broken teeth.

4. Inspect the ball bearing for pitting, scoring, wear and rough operation.

Reassembly

Reassembly is basically the reverse of disassembly however, particular attention should be given the following:

1. Always use new O-rings, gaskets and oil seals. O-rings and oil seals should be coated with lubriplate or chassis lubricant to assist in installation and provide initial lubrication.

2. Install the oil seal <u>after</u> completing the drive assembly in the housing.

3. The pins which secure the direct drive coupling and the driven coupling to their respective shafts must be flush or below the spline groove so as not to interfere with shifting.

4. The long internal splines of the shifter collar go toward the rear.

5. The machined shoulder of the direct drive coupling goes toward the planet carrier.

6. Lubricate the components and rotate the drive shaft several turns with the shifter in each speed selection to insure freedom of movement and rotation.

Installation

1. Place a new gasket on the mounting face of the creeper housing. The dowels will hold it in place.

2. With the shifter collar in its rear position, rotate the drive shaft so the collar will engage the driven coupling as the dowels engage the reduction cover plate and the drive shaft enters its pilot bushing in the driven coupling.

3. Secure the creeper to the reduction housing cover plate and reconnect the rear coupling.

4. Fill the creeper housing to proper level (check plug on side of housing) with the same lubricant as specified for the transmission - differential.

5. Shift the unit several times to insure freedom of movement.

6. Install the frame cover.

FRONT PTO CLUTCH – MECHANICAL
With Brake

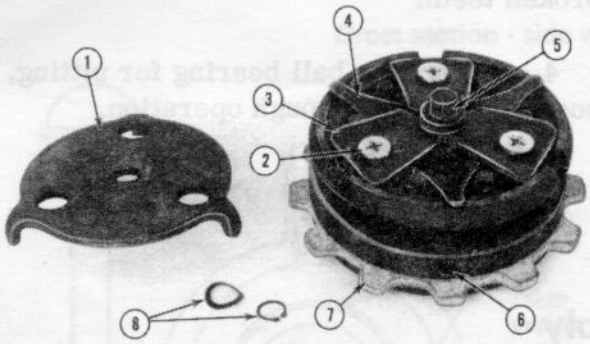

1. Brake shoe
2. Adjusting screw
3. Throw-out lever
4. Pressure springs
5. Thrust button
6. Set screw hole
7. Friction disc lug
8. Curved washer and snap ring

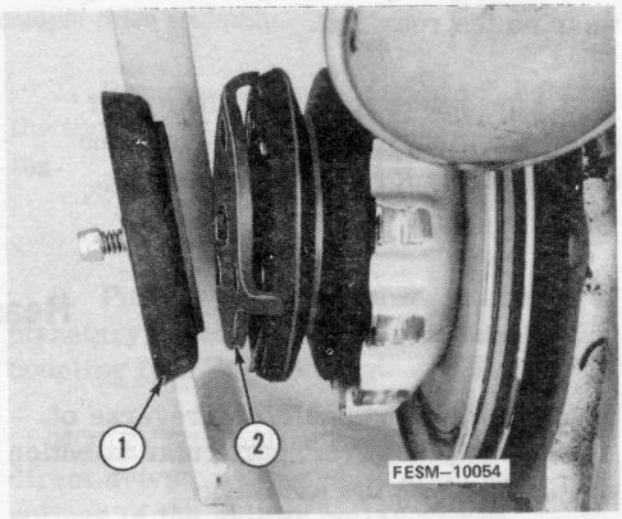

1. Brake shoe
2. Brake disc

A PTO clutch with brake is effective on tracors with serial nos. U482000 - U5299999. The brake increases safety in the operation of the PTO driven equipment. This clutch along with the braking assembly may also be used on Cadets between serial nos. U400000 - U481999 if rockshaft 59 978 C1 and brake shoe assembly 59 973 C1 are installed.

Removal

Removal of this clutch assembly is identical to the removal of the clutch assembly on page 2-76.

Disassembly

The disassembly of this clutch assembly is identical to the disassembly steps on page 2-77. The only exception is the necessary removal of the brake disc from the clutch assembly prior to disassembly.

Inspection and Repair

These steps are identical to the inspection and repair steps on page 2-78.

Reassembly and Adjustment

This clutch can be reassembled and adjusted by following the steps outlined on pages 2-78 thru 2-80.

Installation

The procedure for the installation of the clutch onto the crankshaft is the same as the steps outlined on pages 2-80 and 2-81.

However, the procedures for adjusting the PTO clutch brake should be as follows.

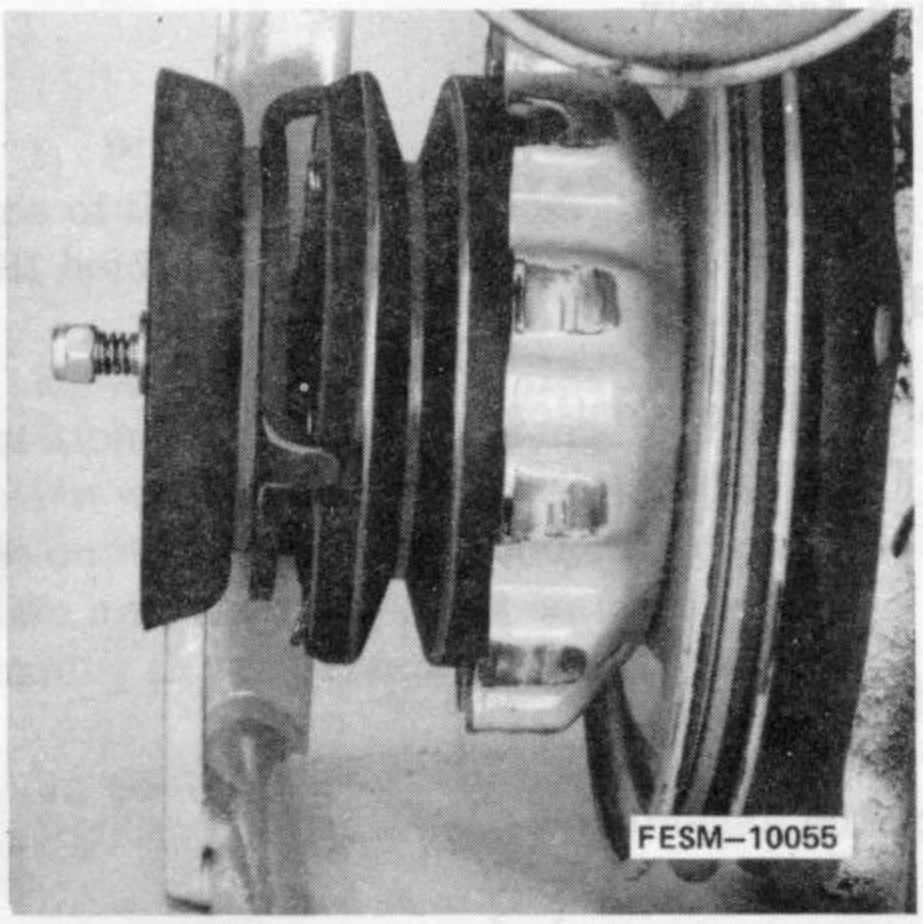

1. Place the hand lever in the rear position (clutch fully disengaged) and tighten the turn buckle until the clutch disengages.

2. Check for disengagement of the clutch by rotating the clutch pulley slightly. The brake will prevent complete rotation of the clutch pulley.

3. Then tighten the turn buckle one full turn and lock.

4. Disengage the lever and check for running clearance between the brake and the clutch.

FRONT PTO CLUTCH – MECHANICAL
Without Brake

Removal

1. Remove the grille.

2. Disengage the clutch and align the set screw holes with the notches in the crankshaft pulley.

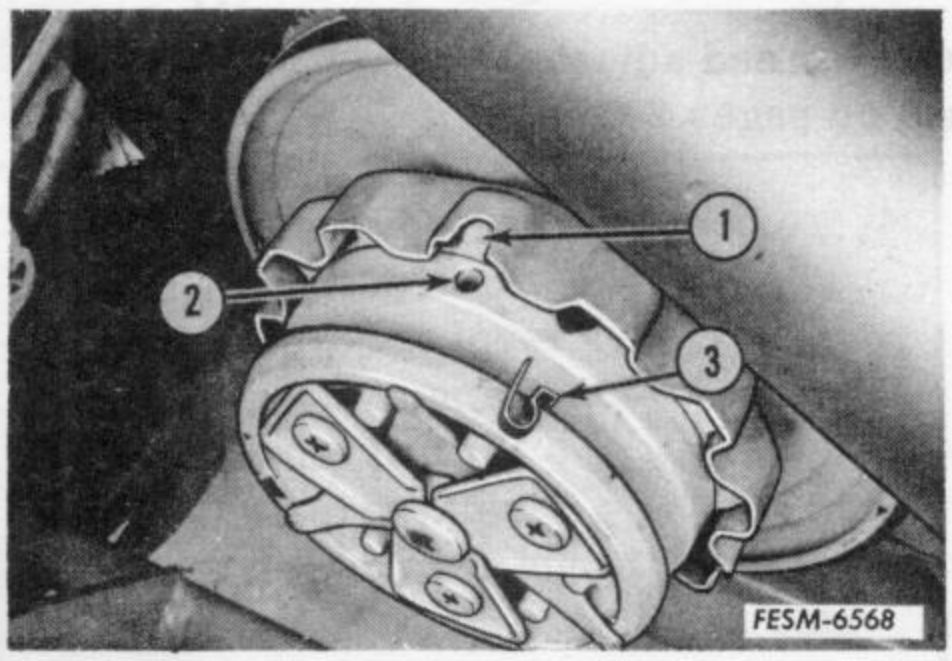

3. Remove the jam set screw and lock set screw from each of the three holes in the clutch pulley housing.

NOTE: These set screws lock the clutch to the bearing on the tractor crankshaft.

1. Notch
2. Set screw hole
3. Friction disc spring installing position

4. Disconnect the PTO linkage and rotate the clutch release shaft forward out of the way.

5. Remove the clutch from the tractor as an assembly.

Disassembly

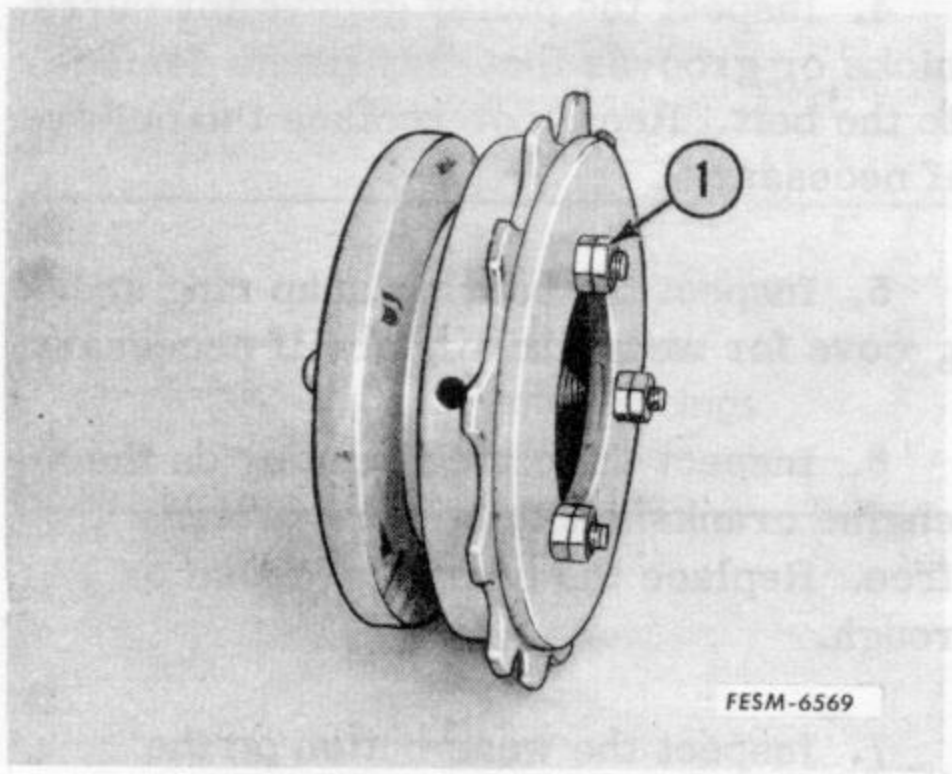

1. Remove the jam nuts from the throw-out lever screws.

1. Jam nut

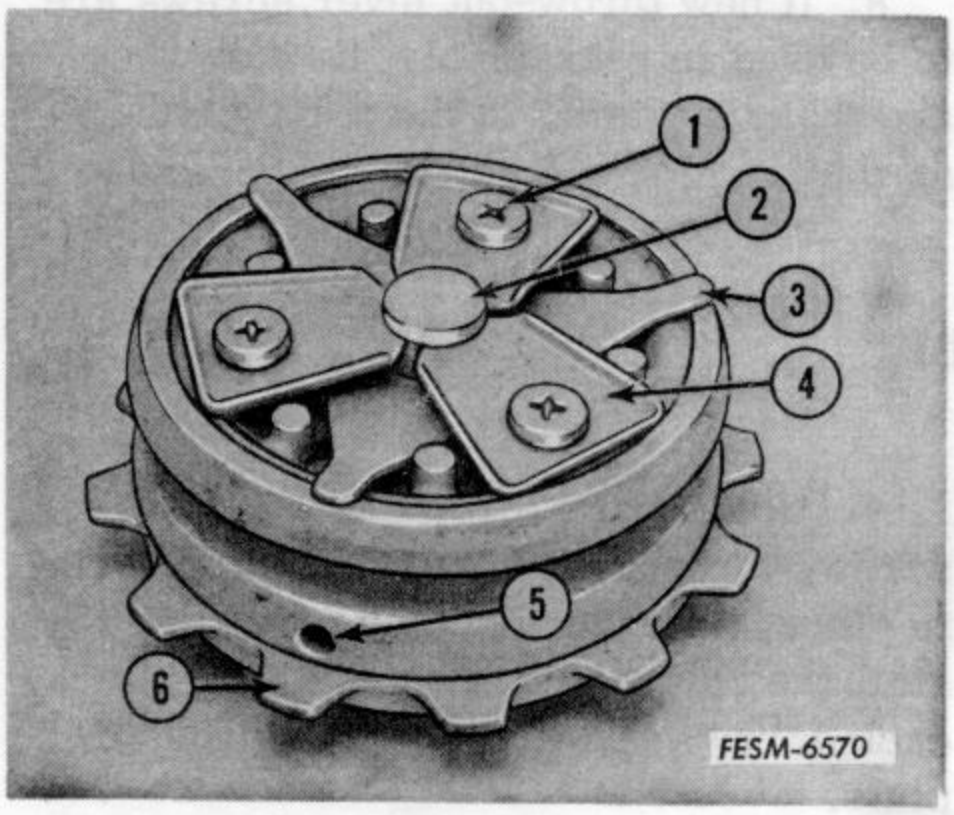

2. Loosen the throw-out lever adjusting screws evenly and remove the screws.

1. Screw
2. Thrust button
3. Pressure springs
4. Throw-out lever
5. Set screw hole
6. Friction disc lug

Inspection and Repair

1. Inspect the pressure plate for scoring or excessive warpage. If it is .010 inch or more out of flat it must be replaced.

2. Inspect the friction disc for scoring, cracks or damaged lugs.

NOTE: The clutch will operate satisfactorily if four lugs are broken, providing the four broken lugs are not grouped together. If it is necessary to replace the friction disc, the pressure spring must be replaced at the same time.

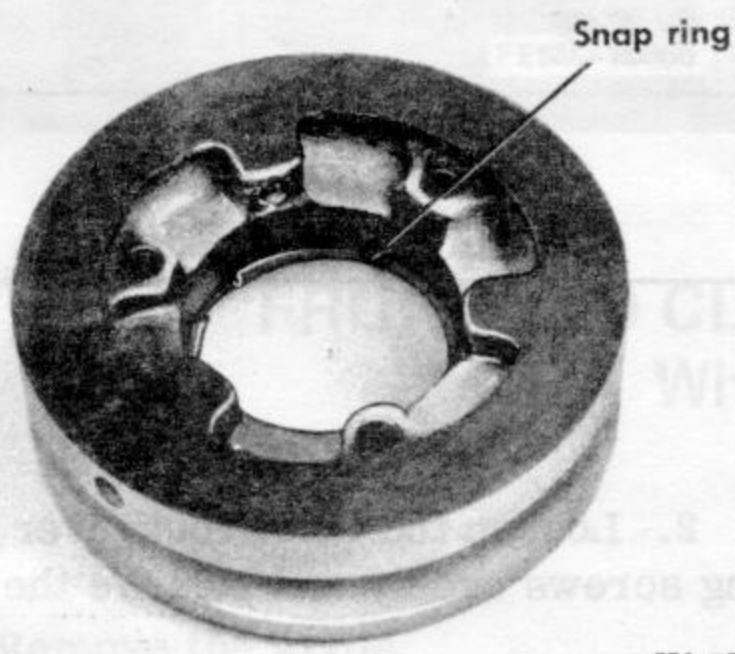

FEA-75292

3. Inspect the thrust button for damage or wear and replace if necessary.

4. Inspect the pulley groove for burrs, nicks or grooves that may cause damage to the belt. Repair or replace the pulley if necessary.

5. Inspect the bearing snap ring and groove for wear and replace if necessary.

6. Inspect the clutch bearing on the engine crankshaft to be sure it turns free. Replace the bearing if loose or rough.

7. Inspect the wear button on the clutch release shaft assembly for wear and replace if necessary.

8. If new throw-out lever screws are to be used in reassembly, be sure they are those as listed in the parts catalog as these are special machine screws.

Reassembly

1. Position the pressure springs on the actuating pulley so the tips are between the cast lugs.

2. Install the thrust button on the pressure spring.

3. Install the three throw-out levers so they engage the slot in the thrust button. Line up the screw holes and install the screws.

4. Holding the throw-out levers, screws thrust button and pressure spring in place, turn the assembly over and install the compression springs (one to each screw), friction disc and pressure plate.

NOTE: The 14 HP model is equipped with dual friction discs. A dual disc repair kit may be applied to the 10 or 12 HP model if additional reliability is required.

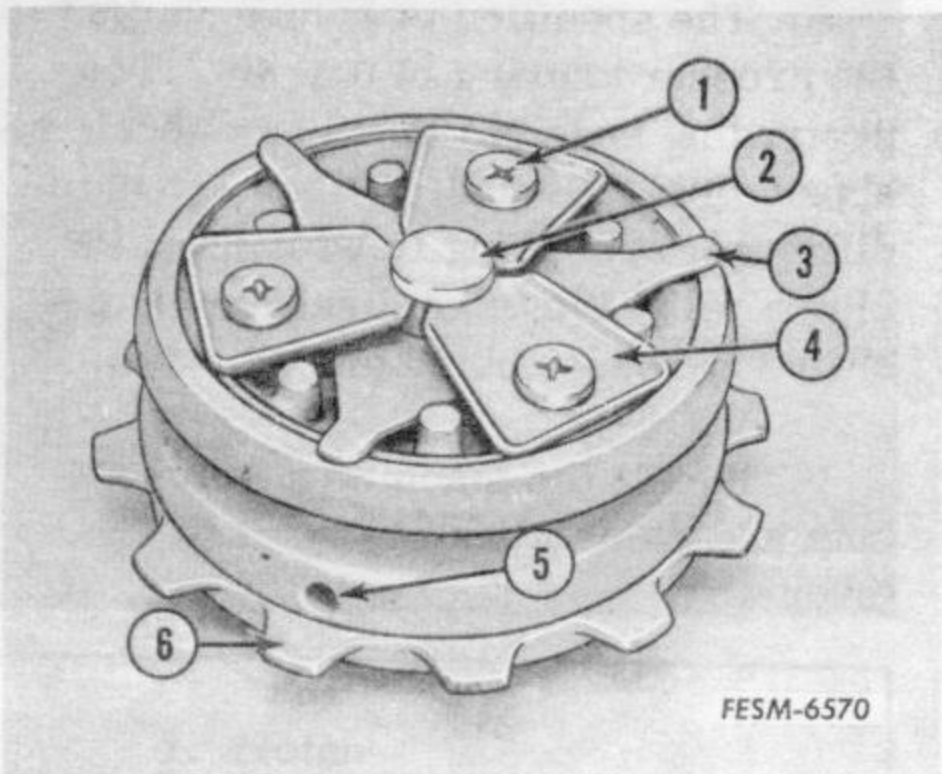

1. Screw
2. Thrust button
3. Pressure springs
4. Throw-out lever
5. Set screw hole
6. Friction disc lug

5. Install the nuts on the screws and tighten them finger tight. Be sure the friction disc is centered and that a lug on the disc is centered with a set screw hole in the pulley housing.

Adjustment

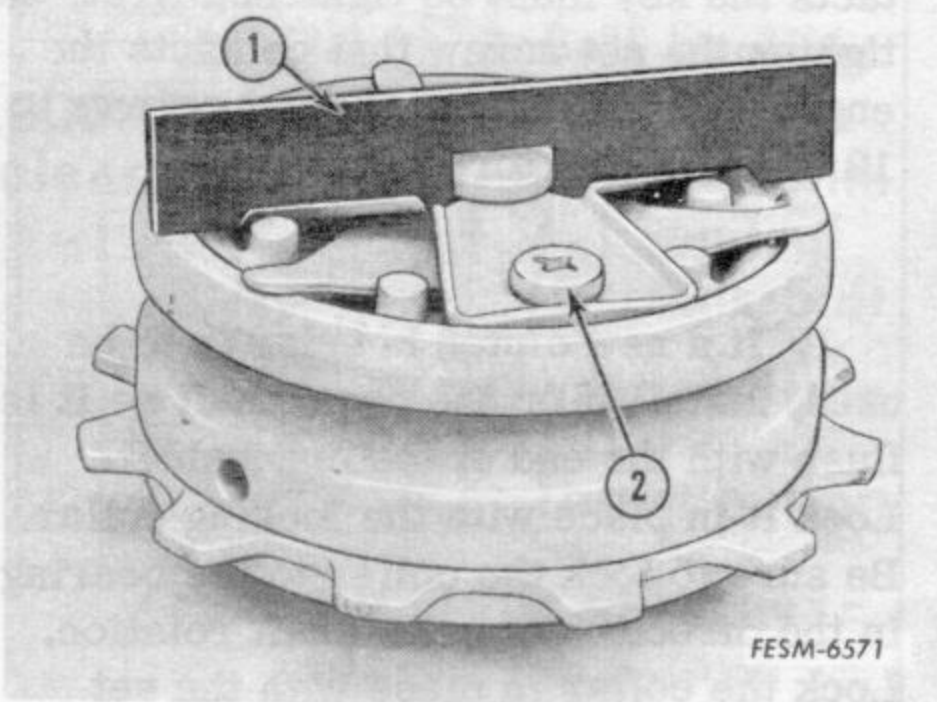

1. Gauge
2. Adjust here

1. Install the adjusting gauge in position shown.

NOTE: Adjusting gauge is supplied with clutch disc repair kit.

2. Tighten the special machine screw (in line with the center of the gauge) until the gauge ends contact the machined surface of the pulley. The gauge should not rock the tips.

3. Repeat step 2 for the remaining two gauge positions.

4. Recheck each of the three positions with the gauge a second time after all three screws have been adjusted to be sure all three adjustments are equal.

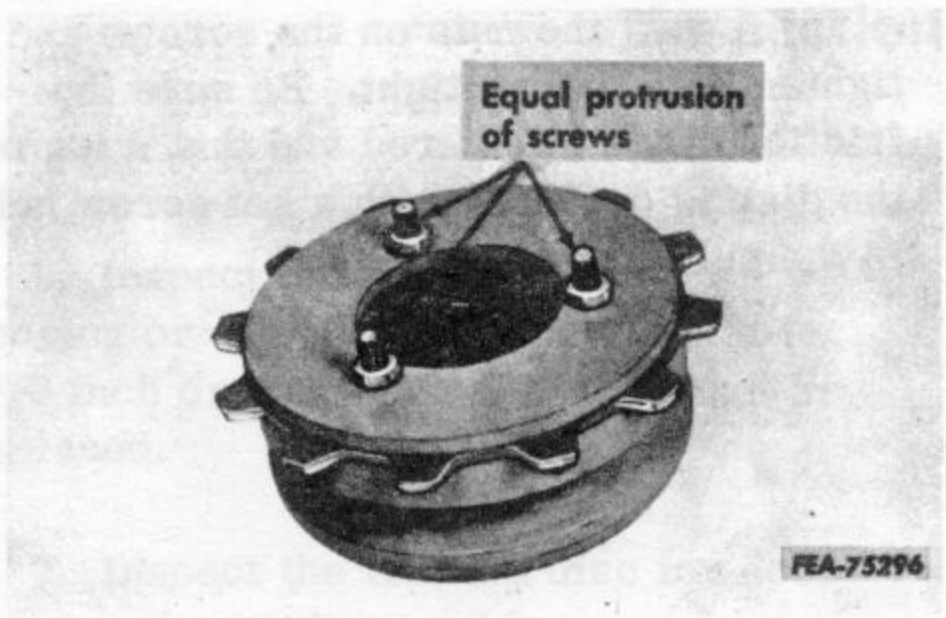

5. The specified pressure applied to the pressure spring is now set. The protruding ends of the screws should be approximately equal. If they are quite different, something is wrong and the clutch will have to be disassembled, checked, reassembled and adjusted.

6. Install the machine screw lock nuts and tighten them to 6 - 7 ft. lbs. torque.

Installation

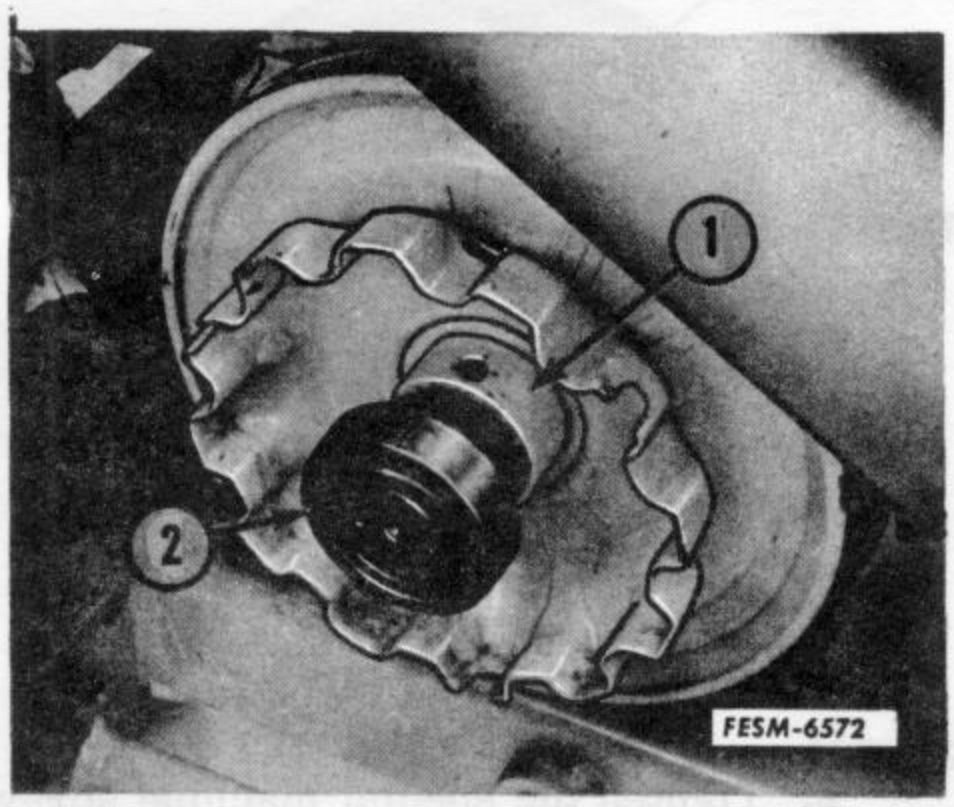

1. Drive pulley hub
2. Clutch bearing

Front

NOTE: The drive pulley hub must be 1-1/2" from end of crankshaft on 8 HP Model and 1-1/4" on 10, 12 and 14 HP Models.

IMPORTANT: The set screw that contacts the key must be tightened first; then tighten the set screw that contacts the engine shaft. Tighten the set screws to 12 to 14 ft. lbs. torque.

1. If a new clutch bearing is to be used, install it on the crankshaft so it is flush with the end of the crankshaft. Lock it in place with the locking collar. Be sure to lock the collar to the bearing in the direction of crankshaft rotation. Lock the collar in place with the set screw and nut equipped.

2. Install the clutch assembly on the bearing part way. Be sure the set screw holes in the clutch pulley housing line up with the slots in the drive pulley cup.

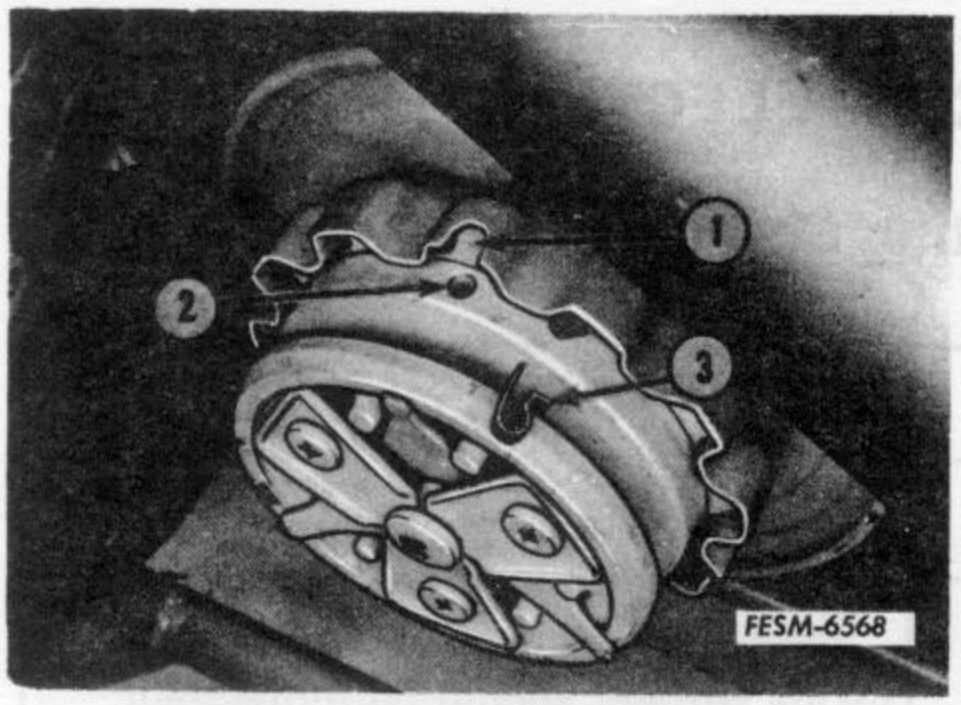

1. Notch
2. Set screw hole
3. Friction disc spring installing position

3. Equally space and install 3 friction disc springs on the friction disc lugs on the non-drive side of the lugs. The non-drive side of the lugs is the left hand side of the lug when looking at the front of the clutch. Place flat side of springs inside the cup. Push the clutch assembly the rest of the way on the bearing until the snap ring in the clutch is flush with the bearing. Be sure the complete thickness of the disc is inside the drive pulley cup.

4. Install the three 1/4 x 1/2 inch cone point hex socket set screws in the clutch pulley and torque them to 60 - 72 in. lbs.

5. Install the three 1/4 x 1/4 inch flat point hex set screws and torque them to 72 - 84 in. lbs.

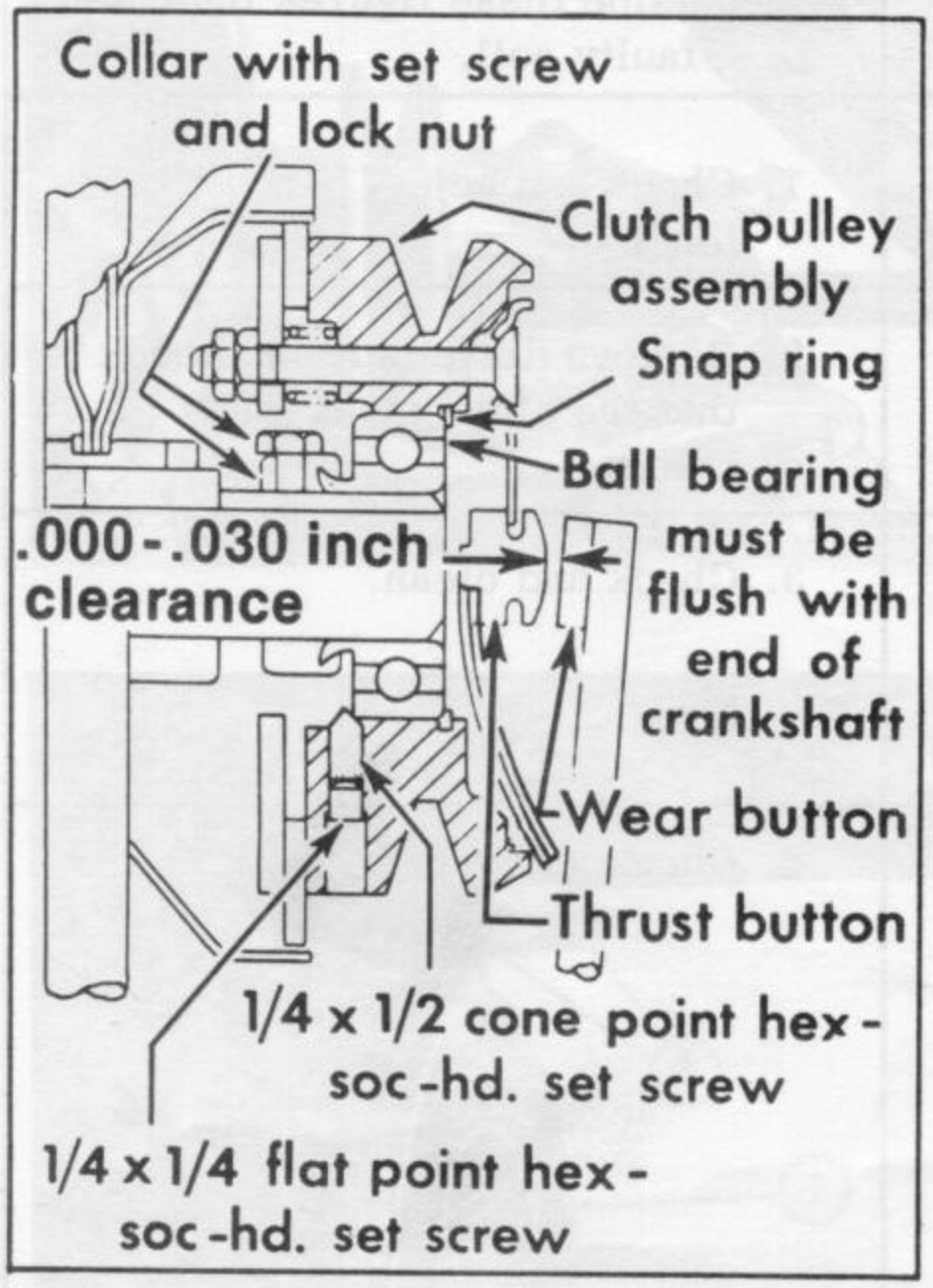

FESM-6573 A

6. With the hand lever in the forward position (clutch fully engaged), adjust the turnbuckle so there is .000 to .030 inch minimum clearance between the wear button and thrust button. Secure the turn buckle with the jam nut.

7. Install the grille.

FRONT PTO CLUTCH – ELECTRIC

Trouble Shooting Chart

PROBLEM	CAUSE	TEST
Clutch does not engage	1. Blown fuse.	1. Visually inspect.
	2. Broken wire or bad connection.	2. Check voltage at clutch wire. Voltage should be more than 10 volts. If there is no reading check for broken wires or connections.
	3. Faulty field coil.	3. Make sure that the coil is making good ground contact. Engage the clutch and check the amperage draw at the battery. Normal amperage draw is 3.5 to 4.0. A reading outside these figures indicates a faulty coil.
Engine driven attachment rotates slower than normal	1. Loose drive belt.	1. Check and adjust belt tension.
	2. Attachment not turning freely.	2. Remove drive belt and check that the attachment turns freely.
	3. Grease, oil, dirt or other contaminant in pulley grooves or on clutch faces.	3. Check and clean.
	4. Intermittent break or poor connection in wiring.	4. Check and repair.

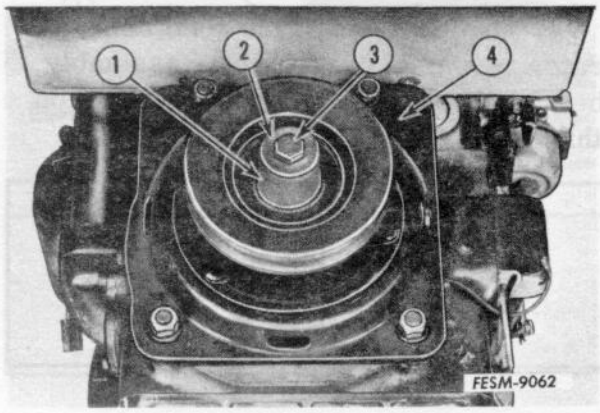

1. Spacer
2. Washer
3. Retaining bolt
4. Brake flange

1. Remove the engine side hood panels and disconnect the clutch wire.

2. Remove the grille housing and hood as an assembly.

3. Remove the brake flange.

4. Remove the retaining bolt, washer and spacer.

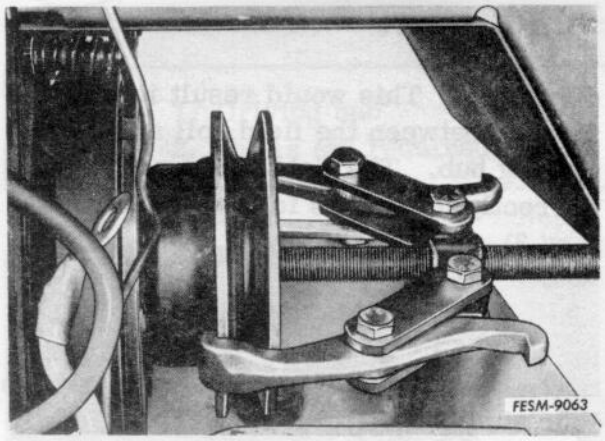

5. Using a suitable puller, remove the clutch rotor assembly.

6. Remove the driving hub and key from the crankshaft.

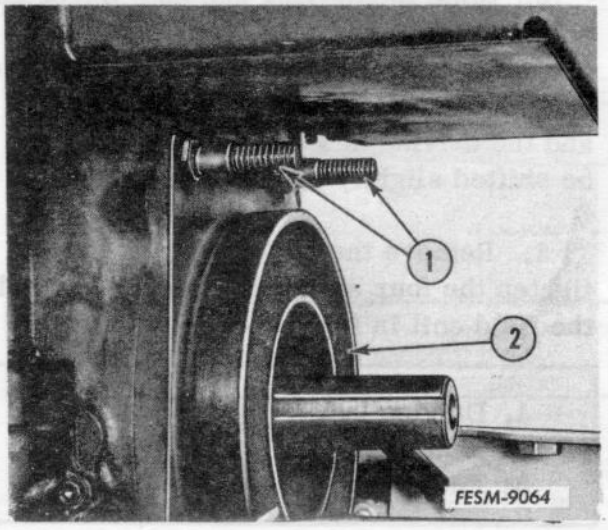

7. If it is necessary to take off the field coil, remove the four stud bolts.

1. Stud bolts
2. Field coil

Inspection and Repair

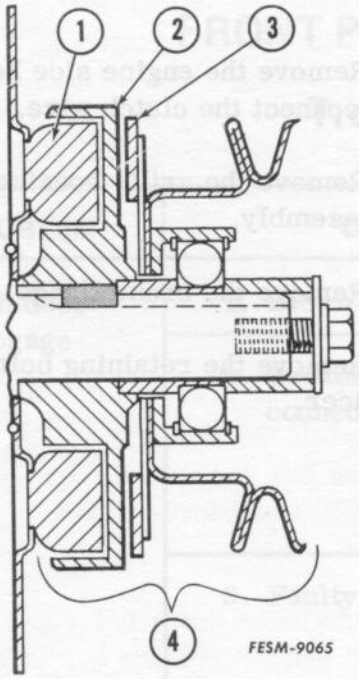

1. Replacement of the field coil, rotor assembly and/or rotor assembly bearing is the only service available on this clutch.

1. Field coil
2. Driving hub
3. Driven disc
4. Rotor assembly

NOTE: There may be factory installed shims between the driving hub and driven disc bearing carrier. Be sure they are in place during reassembly to assure proper braking action of the P. T. O. when disengaged.

Installation and Adjustment

NOTE: The field coil for the electric IPTO clutch is centered on the crankshaft by four tabs that fit into the bore for the main bearing oil seal. On some blocks the chamfer for the main bearing oil seal may be too deep, and the field coil may be off center. This would result in interference between the field coil and the driving hub. The field coil must be correctly located as follows. (Steps 1 thru 3)

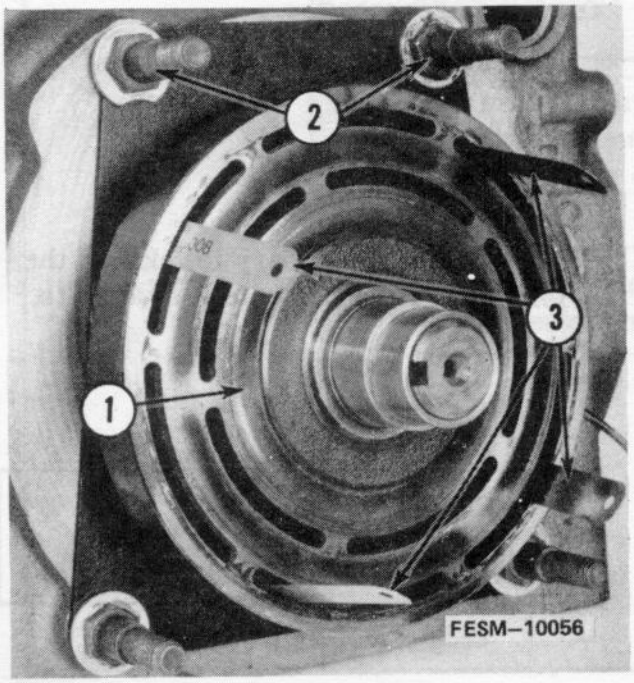

1. Install the field coil and install the four stud bolts finger tight.

2. Slide the driving hub onto the crankshaft. Then using .008-.010 inch feeler gauges, determine that there is clearance at four locations between the field coil and the driving hub. The field coil may be shifted slightly if necessary.

3. Remove the feeler gauges and tighten the four stud bolts to securely hold the field coil in its proper location.

1. Driving hub
2. Stud bolts (4)
3. Feeler gauges (.008-.010 inch)

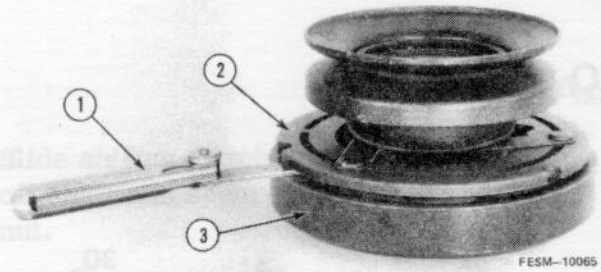

1. Feeler gauge
2. Driven disc
3. Driving hub

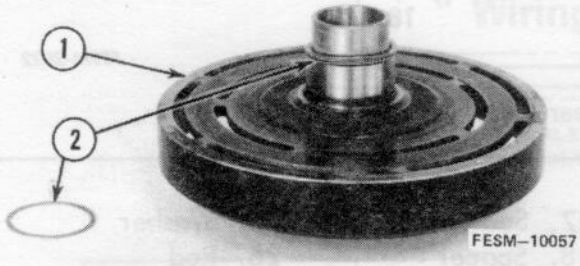

1. Driving hub
2. Shims (as required)

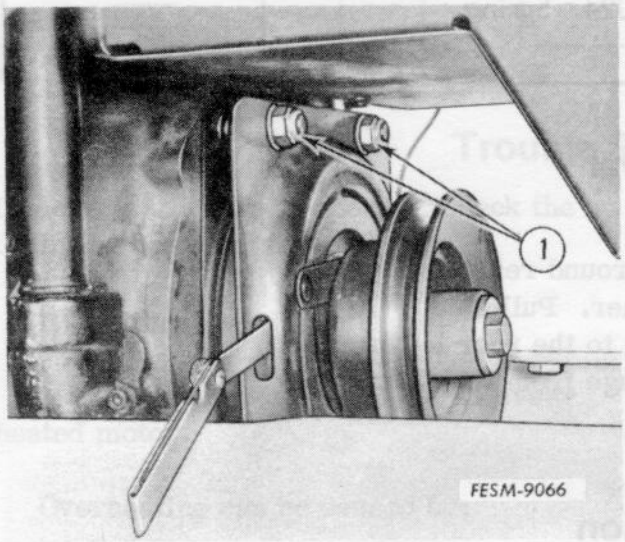

1. Brake flange mounting nuts

4. Place the driven disc onto the driving hub on a bench as shown.

5. Determine the clearance between the driven disc and the driving hub using a feeler gauge at three evenly spaced locations. There should be a gap of .060 - .090 inches.

6. Add or remove shims as required onto the driving hub.

NOTE: Some late production tractors have an electric IPTO clutch which does not require shims. The free air gap is permanently set. This clutch is unpainted, where as the clutch which requires shims is painted black.

7. Install the driving hub along with the necessary shims onto the crankshaft.

8. Install the clutch rotor assembly.

9. Install the spacer, washer and the retaining bolt.

10. Install the brake flange.

11. Adjust the clutch as follows:

a. Disengage the clutch.

b. Check the clearance between the driven disc and the driving hub by inserting a feeler gauge in the four slots in the brake flange. There should be a .010 inch gap between the driven face of the rotor assembly and the driving hub.

c. Tighten or loosen the brake flange mounting nuts to obtain the correct gap around the rotor assembly.

12. Connect the clutch wire.

13. Install the grille housing and hood as an assembly.

14. Install the engine side hood panels.

REAR PTO

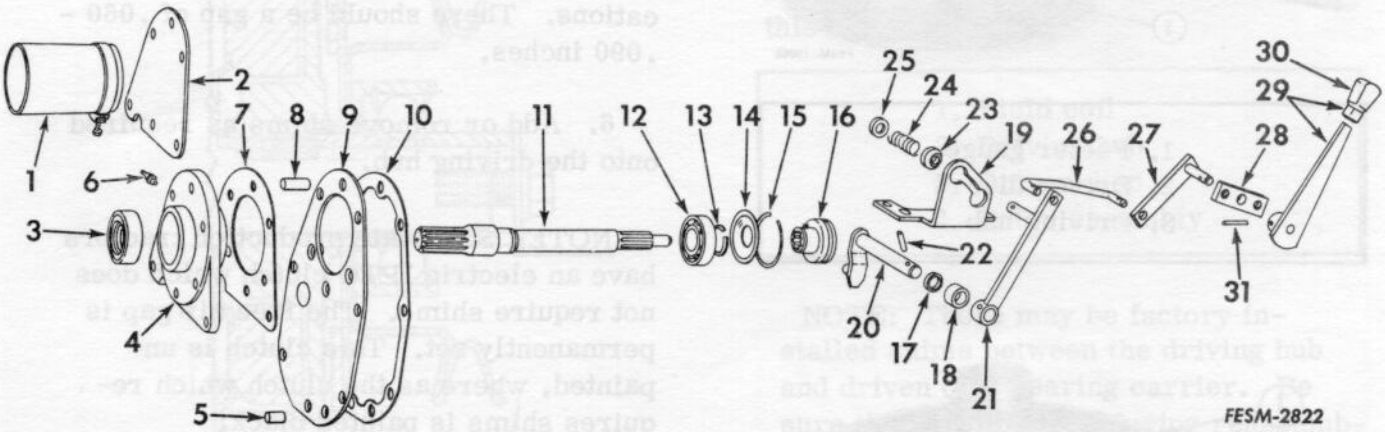

Exploded view of rear PTO.

1. Guard	9. Plate	17. Seal	25. Washer
2. Cover	10. Gasket	18. Spacer	26. Rod
3. Seal	11. Shaft	19. Guide	27. Lever
4. Retainer	12. Bearing	20. Lever	28. Bar
5. Pin	13. Ring	21. Arm	29. Handle
6. Fitting	14. Shield	22. Pin	30. Knob
7. Gasket	15. Ring	23. Washer	31. Pin
8. Pin	16. Clutch	24. Spring	

Removal

Remove 7 capscrews around rear oil seal and bearing retainer. Pull shaft, retainer, shifter clutch to the rear letting the front clutch disengage from the shift lever shaft.

Inspection

Check shifter clutch for excessive wear. Check lock screw and nut for damage. Inspect bearing and splines. Check lever shaft pin for flat sides.

Assembly

Slide shifter clutch on to the power take off shaft and secure with set screw and nut.

Apply a coating of grease on the pilot end of the power take off shaft. Making sure oil seal is installed with lip towards inside and gaskets are in place, insert power take off shaft assembly through the hole in the adapter plate and engage the pin on the shifter shaft lever with the groove in the clutch.

Move the assembly forward and engage the pilot end of the shaft with the female end of the transmission input shaft.

Fasten the power take off assembly into place with the capscrews removed.

ELECTRIC POWER LIFT
Wiring Diagram

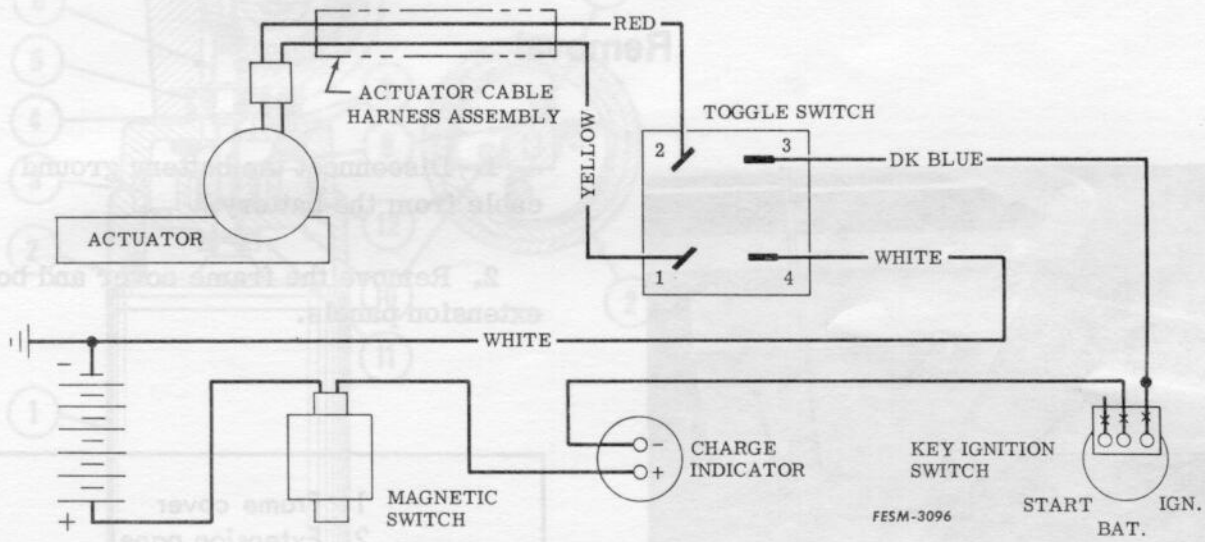

Trouble Shooting

If electric lift fails to operate, check the following before disassembling:

1. Battery may be discharged.

2. Overload switch open due to overheated motor.

Overheating can be caused by:

a. Holding switch too long at end of stroke. Allow unit to cool for 5 - 10 seconds.

b. Motor drawing excessive current.

3. Loose or broken wires. Refer to wiring diagram.

4. The electric lift toggle switch may be faulty if the unit operates in one direction only, does not operate at all, or operates only after repeated movements of the switch lever.

If the electric lift operates more than eight seconds for full stroke, check:

1. For low battery and/or low generator output.

2. For binding linkage.

3. For low current draw indicated by ammeter pointer not going beyond first mark on discharge side with lift raising the implement. This check is made with engine off and ignition switch on.

a. Poor or loose wiring connections.

b. Motor defective.

4. For high current draw indicated by ammeter pointer going beyond last mark on discharge side with lift raising the implement. This check is made with engine off and ignition switch on.

a. Motor defective.

b. Internal binding of unit.

Removal

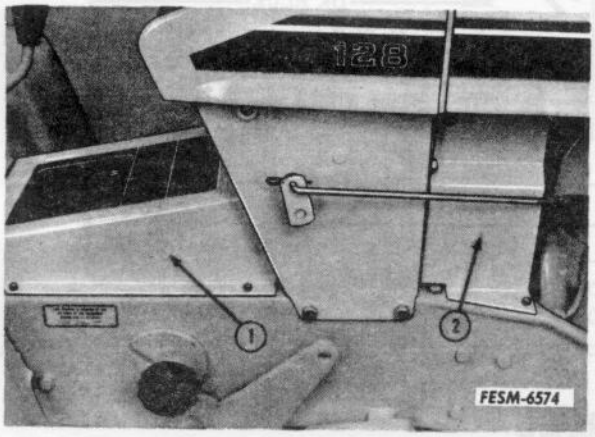

1. Disconnect the battery ground cable from the battery.

2. Remove the frame cover and both extension panels.

1. Frame cover
2. Extension panel

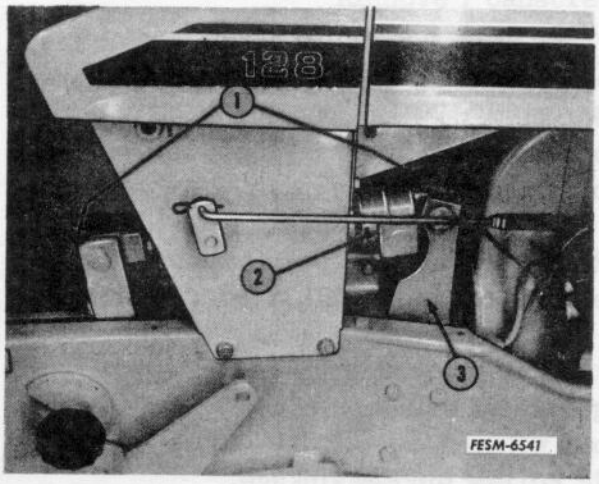

3. Disconnect the wires at the multiple connector by the motor.

4. Remove the cotter keys and washers from the mounting pins.

5. Slide unit off the pins and remove it through the platform opening.

1. Cotter key
2. Electric lift cylinder
3. Bracket

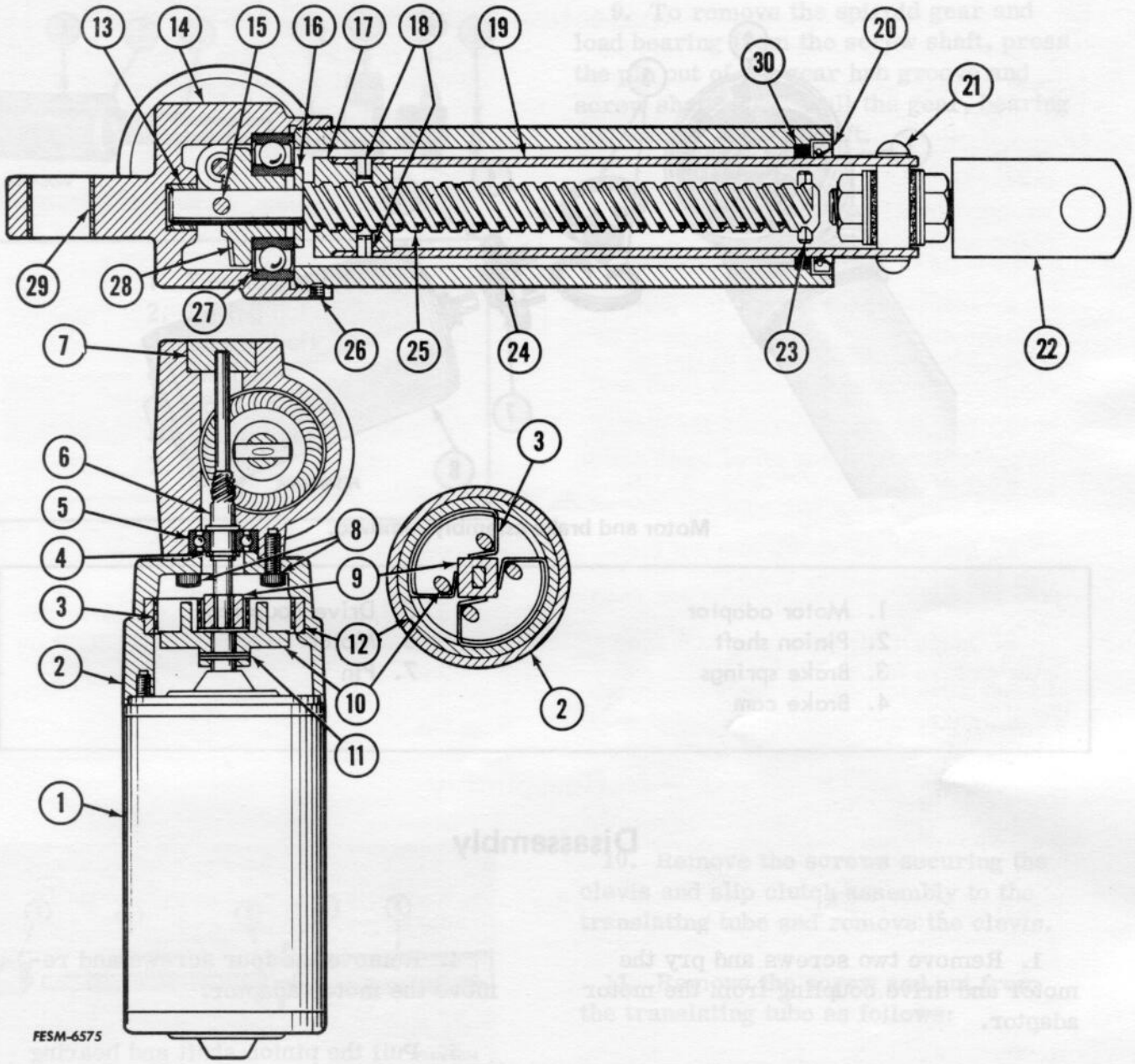

1. Motor	11. Pin	21. Screw
2. Motor adaptor	12. Liner insert	22. Clevis assembly
3. Brake springs	13. Screw bushing	23. Stop pin
4. Retaining ring	14. Housing	24. Outer tube
5. Pinion bearing	15. Pin	25. Screw
6. Pinion shaft	16. Washer	26. Set screw
7. Pinion bushing	17. Lifting nut	27. Load bearing
8. Tap Tite screws	18. Pins	28. Spiroid gear
9. Brake cam	19. Translating tube	29. Bushing
10. Drive coupling	20. Oil seal	30. Guide bushing

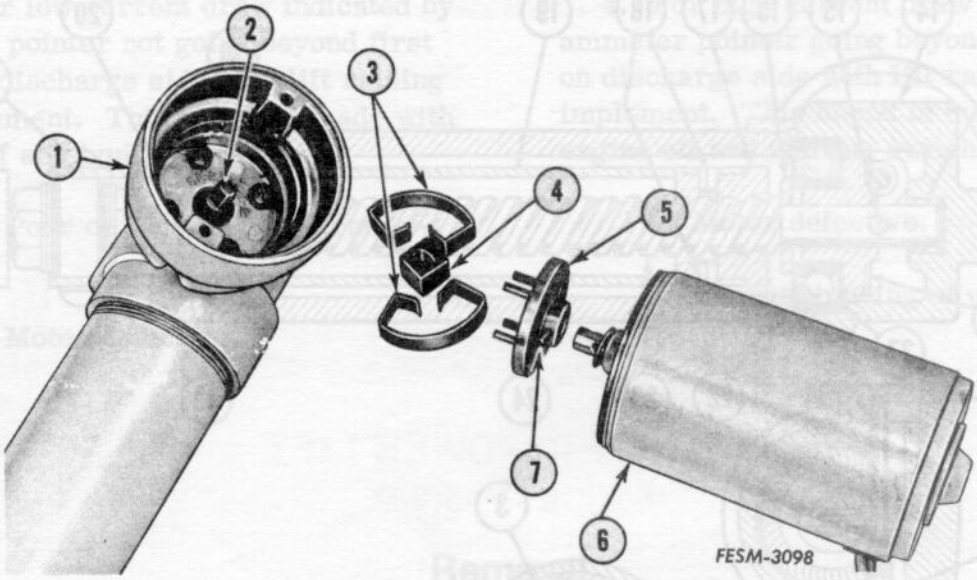

Motor and brake assembly removed.

1. Motor adaptor	5. Drive coupling
2. Pinion shaft	6. Motor
3. Brake springs	7. Pin
4. Brake cam	

Disassembly

1. Remove two screws and pry the motor and drive coupling from the motor adaptor.

NOTE: Do not let motor end plates separate from motor body.

2. To remove the drive coupling from the motor, press the grooved pin out of its bore. Do not remove the coupling unless the coupling or motor is to be replaced.

3. Remove the brake springs and brake cam from the pinion shaft.

4. Remove the four screws and remove the motor adaptor.

5. Pull the pinion shaft and bearing out of the housing.

6. Remove the retaining ring securing the pinion bearing to the pinion shaft and remove the bearing.

7. Loosen the set screw in the housing and unscrew the housing from the outer tube.

8. Pull the screw, load bearing, and spiroid gear out of the housing if it was not removed in the above step.

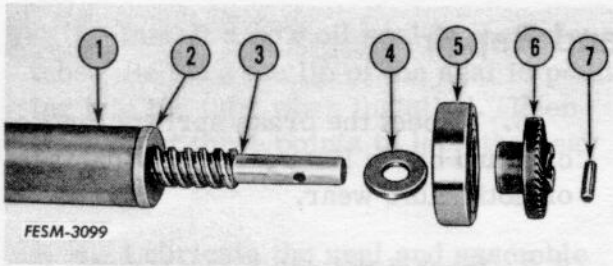

1. Translating tube
2. Lifting nut
3. Screw shaft
4. Washer
5. Load bearing
6. Spiroid gear
7. Pin

9. To remove the spiroid gear and load bearing from the screw shaft, press the pin out of the gear hub groove and screw shaft bore. Pull the gear, bearing and washer off the shaft.

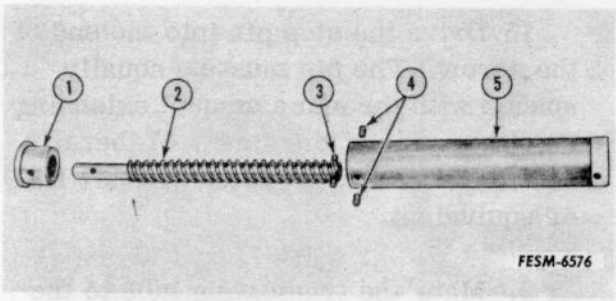

1. Lifting nut
2. Screw shaft
3. Stop pin
4. Pin (2)
5. Translating tube

10. Remove the screws securing the clevis and slip clutch assembly to the translating tube and remove the clevis.

11. Remove the screw and nut from the translating tube as follows:

a. Remove the screw from the nut and translating tube.

b. Press the two pins securing the nut to the translating tube, out through the tube and nut and press the nut out of the tube.

NOTE: Do not attempt to press the two pins out of the translating tube while the screw is still in the nut.

12. Drive the stop pin out of the screw.

Inspection and Repair

1. Clean and inspect all bearings for damage or noticeable play indicating excessive wear. If bearings are not to be discarded, they should be oiled and wrapped in oil proof paper to keep them clean until reassembly.

2. Inspect the bushings for wear or damage and if there is any doubt of their serviceability replace the bushings.

3. Inspect all gear teeth for pitting, chipping and rounding off of teeth due to excessive wear.

4. Inspect the screw and nut for damage or excessive wear.

5. Inspect the snap ring and snap ring groove for wear or damage.

6. Inspect the brake springs, brake cam and brake liner insert for damage or noticeable wear.

7. Inspect the drive coupling for wear or damage.

8. Replace the oil seal in the outer tube.

9. The motor is serviced as a complete unit, and should be replaced if necessary.

10. Inspect all wiring for damage and loose or grounded connections.

11. Lubricate all parts before reassembly with grease, IH 251 HEP or equal.

Reassembly

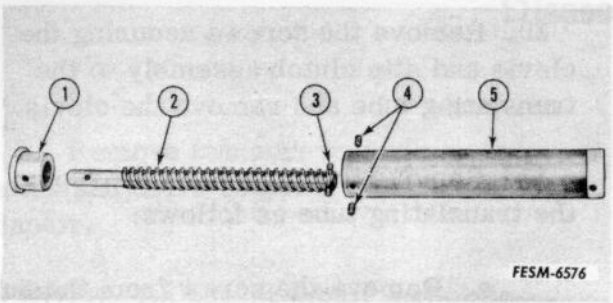

1. Translating tube
2. Lifting nut
3. Screw shaft
4. Washer
5. Load bearing
6. Spiroid gear
7. Pin

1. Drive the stop pin into the end of the screw. The pin must be equally spaced with the same amount extending on either side of the screw. Liberally coat the screw with grease, IH 251 HEP or equivalent.

2. Mate the translating tube to the nut being sure the holes in the nut line up with the holes in the tube. Drive the two pins into the translating tube and nut until they are flush with the translating tube outer diameter.

3. Be sure to grease the screw and assemble it in the translating tube and nut.

4. Attach the clevis with slip clutch to the tube with screws.

5. Install a new oil seal in the outer tube. Be sure the lip of the seal is pointing into the tube when installed. Peen the tube at three points to lock the seal in place.

6. Lubricate the seal and assemble the outer tube on the translating tube.

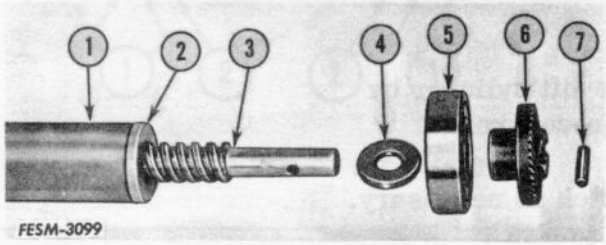

1. Translating tube
2. Lifting nut
3. Screw shaft
4. Washer
5. Load bearing
6. Spiroid gear
7. Pin

7. Assemble the washer, load bearing and spiroid gear on the end of the screw shaft. Drive the pin into the gear hub groove and the bore in the screw. The pin must be equally spaced with the same amount extending on each side of the screw.

8. Grease the spiroid gear and load bearing.

9. Screw the housing into the outer tube until tight. Lock the tube in place with the set screw.

NOTE: If a new outer tube is installed, tighten the tube and spot drill a hole through the tapped hole in the housing into the outer tube about 1/16 inch deep. Lock the tube in place with the set screw.

10. Assemble the pinion bearing onto the pinion shaft and secure with the snap ring retainer. Grease the assembly with IH 251 HEP or equivalent.

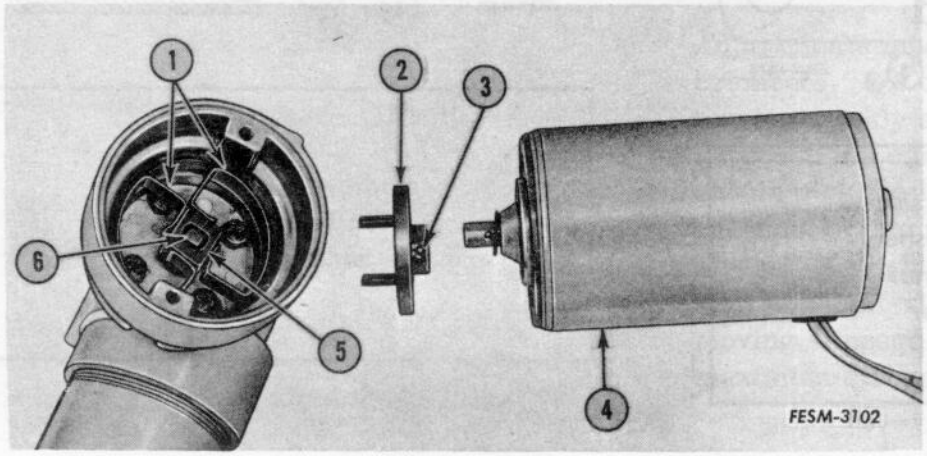

1. Brake springs
2. Drive coupling
3. Pin
4. Motor
5. Brake cam
6. Pinion shaft

11. Install the pinion and bearing assembly in the housing. Install the motor adaptor on the housing and secure it with the four screws. Be sure the two screw holes in the motor adaptor are in line with the outer tube.

12. Lightly grease the inside of the motor adaptor and install the brake cam on the pinion shaft. Install the brake springs on the cam with the outside of the springs against the steel insert brake lining.

13. Pin the drive coupling to the motor if it was removed.

14. Install the motor and drive coupling on the motor adaptor. Be sure the drive pins are installed in the brake springs correctly. Be sure the motor is positioned so the multiple connector and wires are pointing toward the tube.

Installation

1. Install the electric lift cylinder by reversing the removal procedure.

2. Adjust the slip clutch as necessary.

Slip Clutch

Disassembly

Remove the self locking nut. Slide off the bellville washers, thrust washers, and bushing.

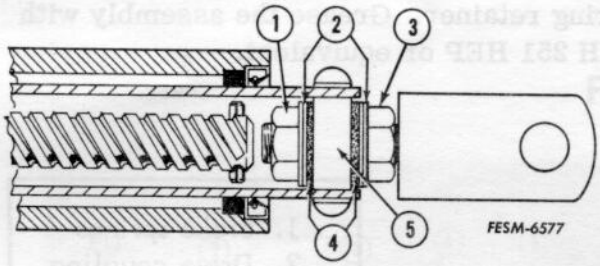

1. Lock nut
2. Bellville washers
3. Adjustment nut
4. Thrust washer
5. Bushing

Cleaning and Inspection

Clean and inspect parts for damage or excessive wear. Replace parts as necessary.

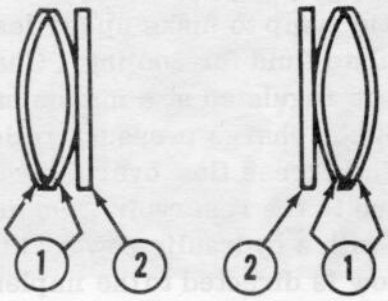

FESM-6578

1. Bellville washers
2. Thrust washer

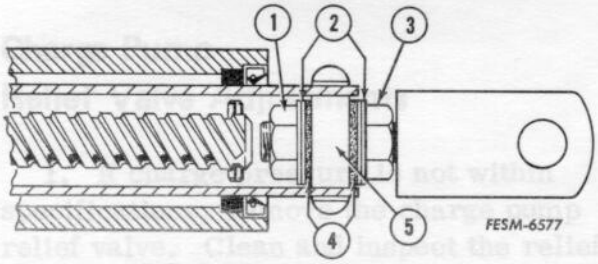

1. Locknut
2. Bellville washers
3. Adjustment nut
4. Thrust washer
5. Bushing

Reassembly

1. Coat the bellville washers, thrust washers and threads lightly with grease. This will not affect the slip torque of the clutch.

2. Assemble the clutch and make sure the bellville washers are correctly oriented. Tighten the locknut to 30 in. lbs. Do not exceed this torque or clutch may fail to slip when cycled for final adjustment. Final adjustment of the clutch is to be made on the tractor.

Adjustment

The slip clutch is adjusted on the tractor by lifting an implement and observing the slip clutch action.

Adjustments must be made in small increments. 1/8 of a turn will change the tension quickly and considerably as you approach the correct setting. The lift should pick the load up without slipping but must rotate freely at the end of the stroke. A slight slip on engagement of load is permissible but once the load is moving slippage should not occur until maximum stroke is reached.

General Information

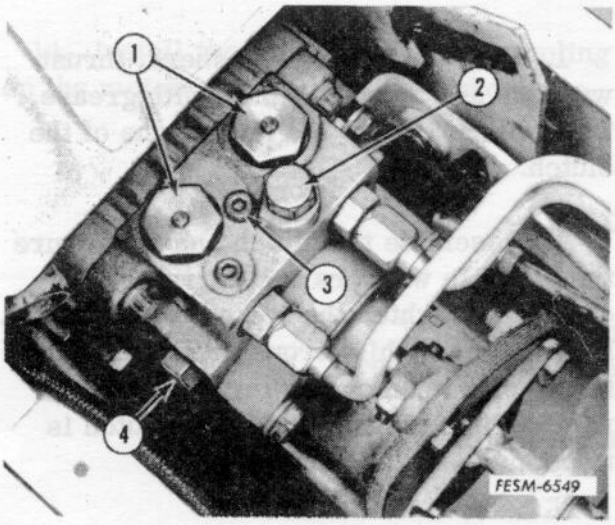

1. Check valve
2. Implement lift relief valve
3. Test port
4. Charge pump relief valve

The charge pump furnishes fluid to the hydrostatic pump to make up for leakage and circulate fluid for cooling. Charge pressure is regulated at a maximum of 200 psi by the charge pressure relief valve. The excess flow over the valve is returned to the reservoir. On models equipped with a hydraulic power lift, this excess flow is directed to the implement control valve. The fluid returns from the valve to the reservoir. Moving the control handle to the raise or lower position will direct fluid to the hydraulic cylinder. Charge pressure during the raise or lower cycle will be equivalent to the lift pressure. Lift pressure is regulated by the lift pressure relief valve at 500 - 625 psi.

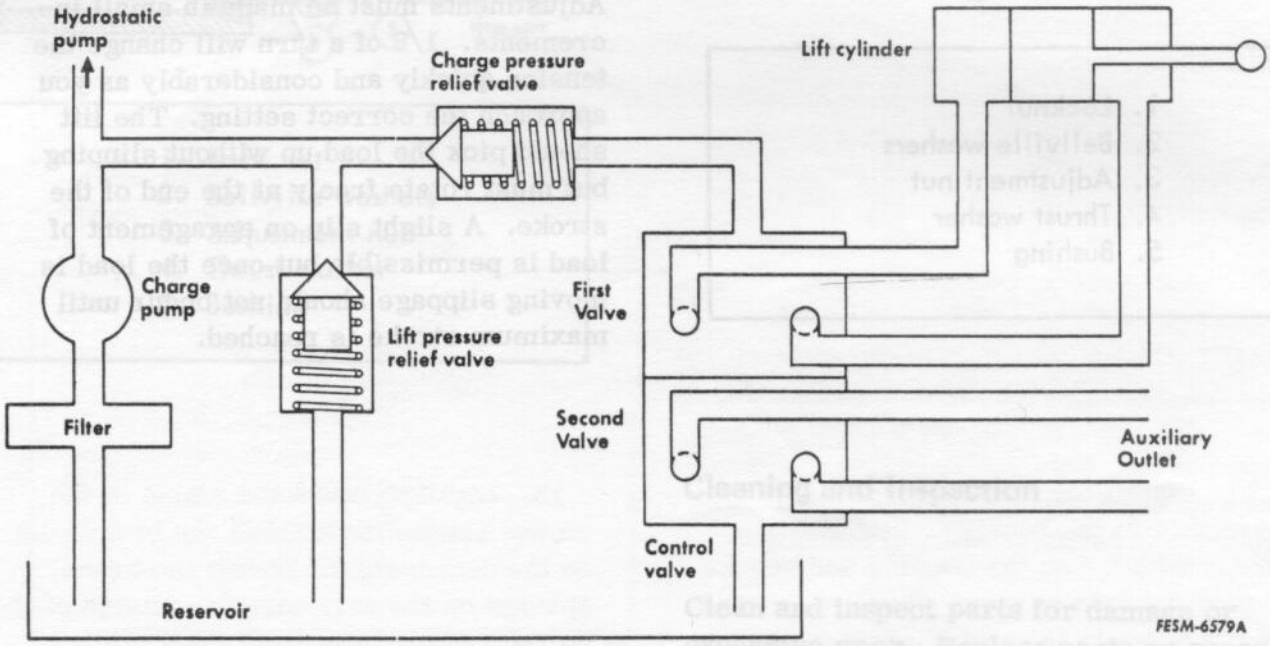

Pressure Check

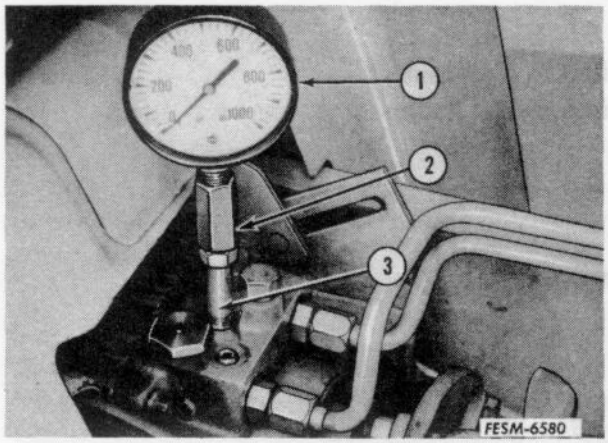

1. 1000 psi gauge
2. 1/8" to 1/4" adapter
3. 1/8" steel pipe nipple

1. Install a 1000 psi gauge.

2. Start the engine and allow the transmission fluid to warm up to approximately 130°F. Operate the engine at a maximum idle speed (no load).

3. With the hydraulic control valve in neutral (if equipped), the gauge should indicate charge pressure as follows:

Cub Cadets

W/O Hydraulic Lift . . . . 90-165 psi
W/Hydraulic Lift . . . . . 200 psi max.

4. With control valve in the raised position and the cylinder at the end of its stroke, the gauge should indicate maximum lift pressure (500-625 psi).

Charge Pump Relief Valve Adjustments

1. If charge pressure is not within specifications, remove the charge pump relief valve. Clean and inspect the relief valve. Check the spring specifications, refer to page 2-8.

2. If the spring is within specifications add or remove spring shims to bring charge pressure within specifications.

3. If shimming the relief valve does not correct the problem, replace the relief valve and shim as necessary.

4. If replacing the relief valve does not solve the problem, inspect the charge pump. Change the O-ring and if necessary replace the charge pump.

5. Remove and overhaul the transmission inspecting for scored valve plates.

Implement Lift Relief Valve Adjustments

1. If lift pressure is not within specifications, remove the implement lift relief valve. Clean and inspect the relief valve. Check the spring specifications, refer to page 2-8. Replace the spring if necessary.

2. If the spring is within specifications add or remove shims to bring lift pressure within specifications.

3. If shimming the implement lift relief valve does not correct the problem replace the relief valve.

Lift Cylinder

Service of the cylinder is limited to replacement of the hoses, fittings and O-rings on the fitting or the cylinder.

Control Valve

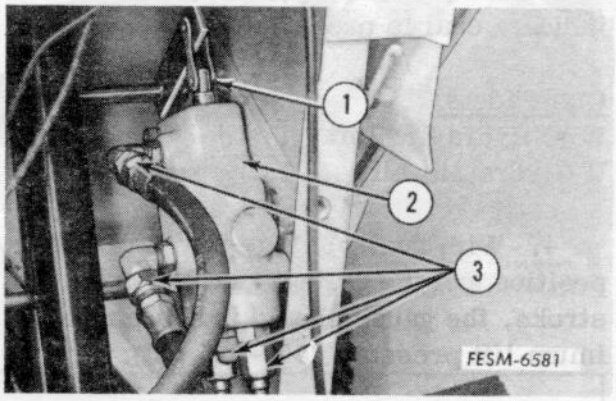

1. Connector link
2. Control valve
3. Hydraulic connections

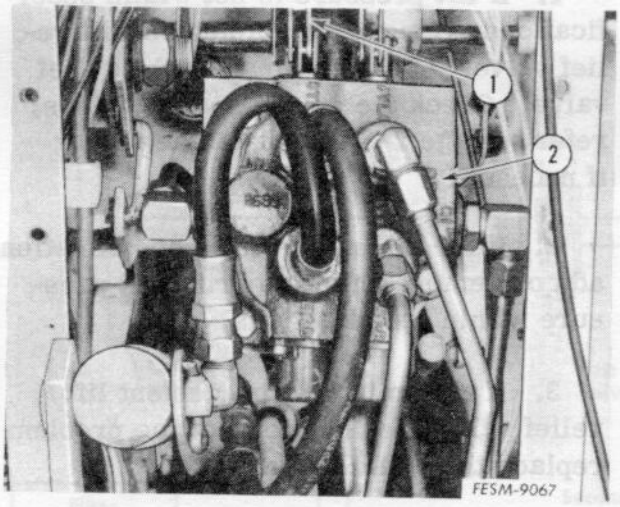

1. Connector link
2. Control valve

Removal

1. Remove the fuel tank and extension panels as an assembly.

2. Disconnect the hydraulic lines at the valve. Cap and plug the openings.

3. Remove the connecting links between the control handles.

4. Unbolt and remove the control valve.

Single Spool Valve

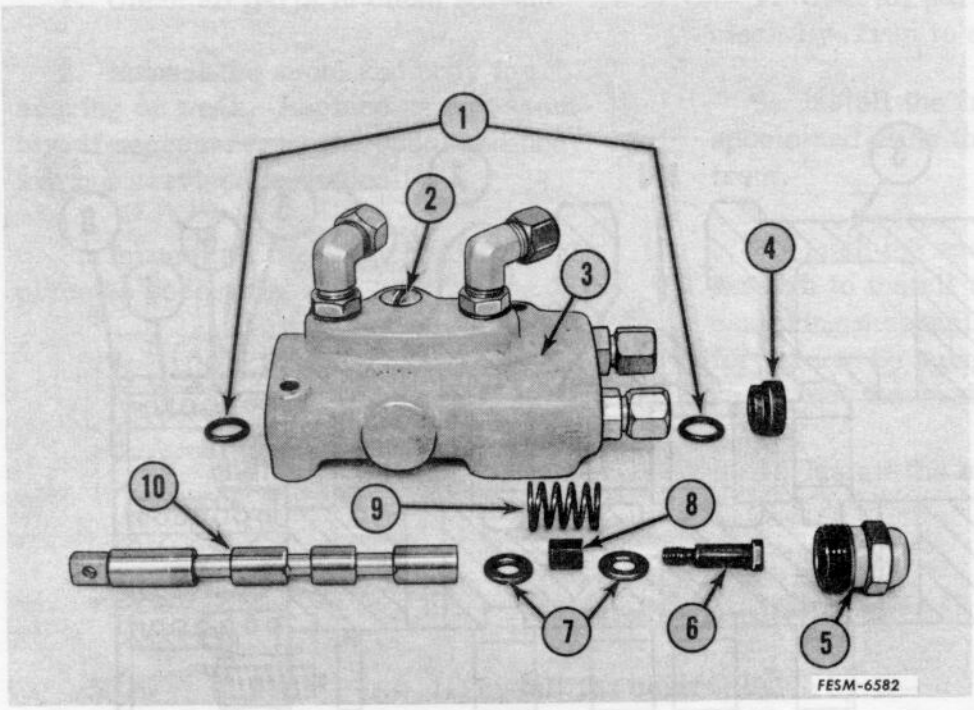

1. O-ring
2. Check valve assembly
3. Valve body
4. Bushing
5. Cap
6. Spool screw
7. Washer
8. Spool spacer
9. Spring, centering
10. Spool

Disassembly

1. Secure the control valve in a vise equipped with brass jaws.

2. Remove the cap and slide the spool out. The bushing and O-ring will probably come out with the spool.

Cleaning and Inspection

1. Clean all parts in clean solvent.

2. Inspect the spool and body for scoring or wear. Replace as an assembly, if necessary, as the spool and body are not serviced individually.

3. Inspect all other parts and replace as necessary.

Reassembly

1. Coat all parts thoroughly with clean Hy-Tran to ease assembly.

2. Assemble the centering spring, washers and shoulder bolt. Coat the threads with "Loctite" and install on the valve spool. Torque the shoulder bolt to 60 - 90 in. lbs. Check the movement of the spring and washers to make sure the bottom washer is not caught between the shoulder bolt and the valve spool.

3. Install the O-rings and bushing in the body.

4. Install the valve spool.

5. Install the cap and tighten to 20 - 25 ft. lbs.

Double Spool Valve

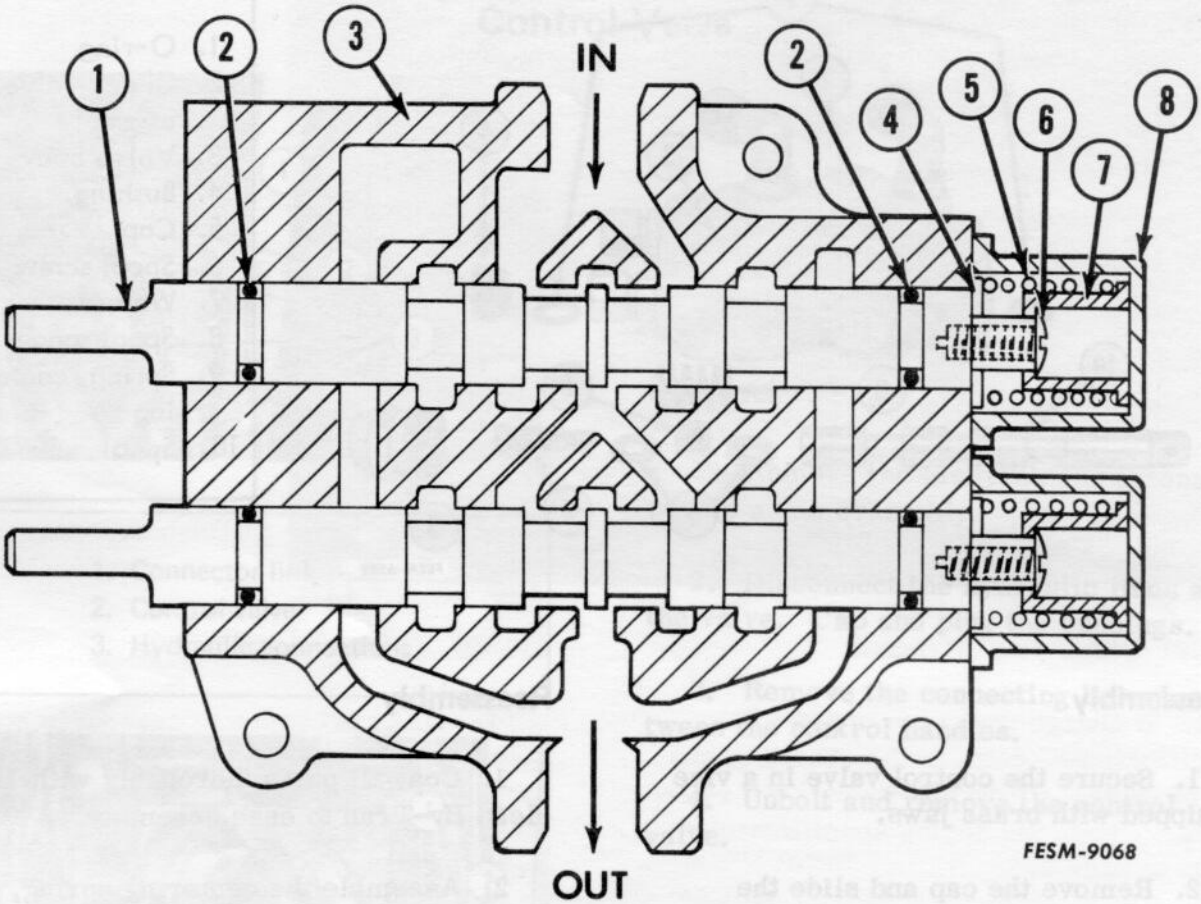

1. Spool	5. Spring
2. O-ring	6. Screw
3. Valve body	7. Spacer
4. Washer	8. End cap

Disassembly

1. Secure the control valve in a vise equipped with brass jaws.

2. Remove the end caps.

3. Hold the spool and remove the centering spring screw, centering spring, spacer and washer.

4. Slide the spool out the rear just far enough to remove the rear O-ring.

5. Slide the spool out of the valve to the front and remove the front O-ring.

Cleaning and Inspection

1. Clean all parts in clean solvent.

2. Inspect the spool and body for scoring or wear. Replace as an assembly, if necessary, as the spool and body are not serviced individually.

3. Inspect all other parts and replace as necessary.

Reassembly

1. Coat all parts thoroughly with clean Hy-Tran to ease assembly.

2. Install the front O-rings on the spools and slide them in through the front.

3. Push the spools just far enough through to install the rear O-rings and centering mechanism. Pull each spool forward to be sure the spacer is on the spool, not the washer.

4. Install the end caps.

Installation

1. Install the control valve by reversing the removal procedure.

2. Cycle the cylinder several times to expel the air from the system and check for leaks.

3. Check the fluid level in the rear housing and fill to proper level with Hy-Tran or its equivalent.

WORK SAFELY – FOLLOW THESE RULES

This symbol is used to call your attention to instructions concerning your personal safety. Be sure to observe and follow these instructions.

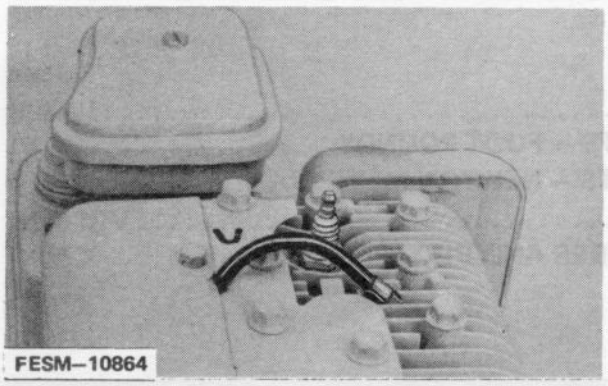
FESM–10864

1. To prevent accidental starting, always pull the high tension wire(s) off of the spark plug(s) before servicing and/or adjusting the machine.

2. To prevent injury, do not allow children or by-standers around the machine while it is being adjusted and/or serviced.

3. Do not wear rings, wrist watches or loose fitting clothing when working on machinery, they could catch on moving parts causing serious injury. Wear sturdy, rough-soled work shoes. Never adjust and/or service a machine in bare feet, sandals or sneakers.

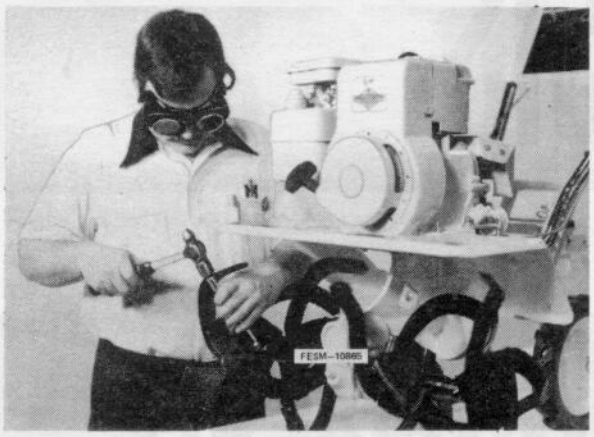
FESM–10865

4. Always wear safety glasses when using a hammer, chisel or other tools that may cause chips to fly.

5. Be sure to reinstall safety devices, guards or shields after adjusting and/or servicing the machine.

6. When operating a power washer to clean a machine before servicing, be careful at all times to avoid injury. Maintain proper footing and balance at all times. Never direct the spray at people or animals, as high pressure spray can cause serious injury.

7. If a portable heater is used to heat the service area the following precautions must be observed:

(a) Do not use portable heaters in presence of volatile materials such as gasoline or paint, as fire or explosion may result.

(b) To avoid being burned, do not touch the heater during operation.

(c) Portable heaters consume oxygen and combustion fumes can be hazardous. Heater should be used only in a well ventilated area. Keep a window or door partially open to provide ventilation.

(d) Keep the heater at least four (4) feet from combustible materials.

(e) Never use gasoline as fuel.


FESM–10866

8. Handle gasoline with care - it is highly flammable:

(a) Use approved gasoline container.

(b) Never remove the fuel tank cap or fill the fuel tank when the engine is running, is hot, or indoors. Also, do not smoke when working around flammable fuel.

Section 3

IH EQUIPMENT

CONTENTS

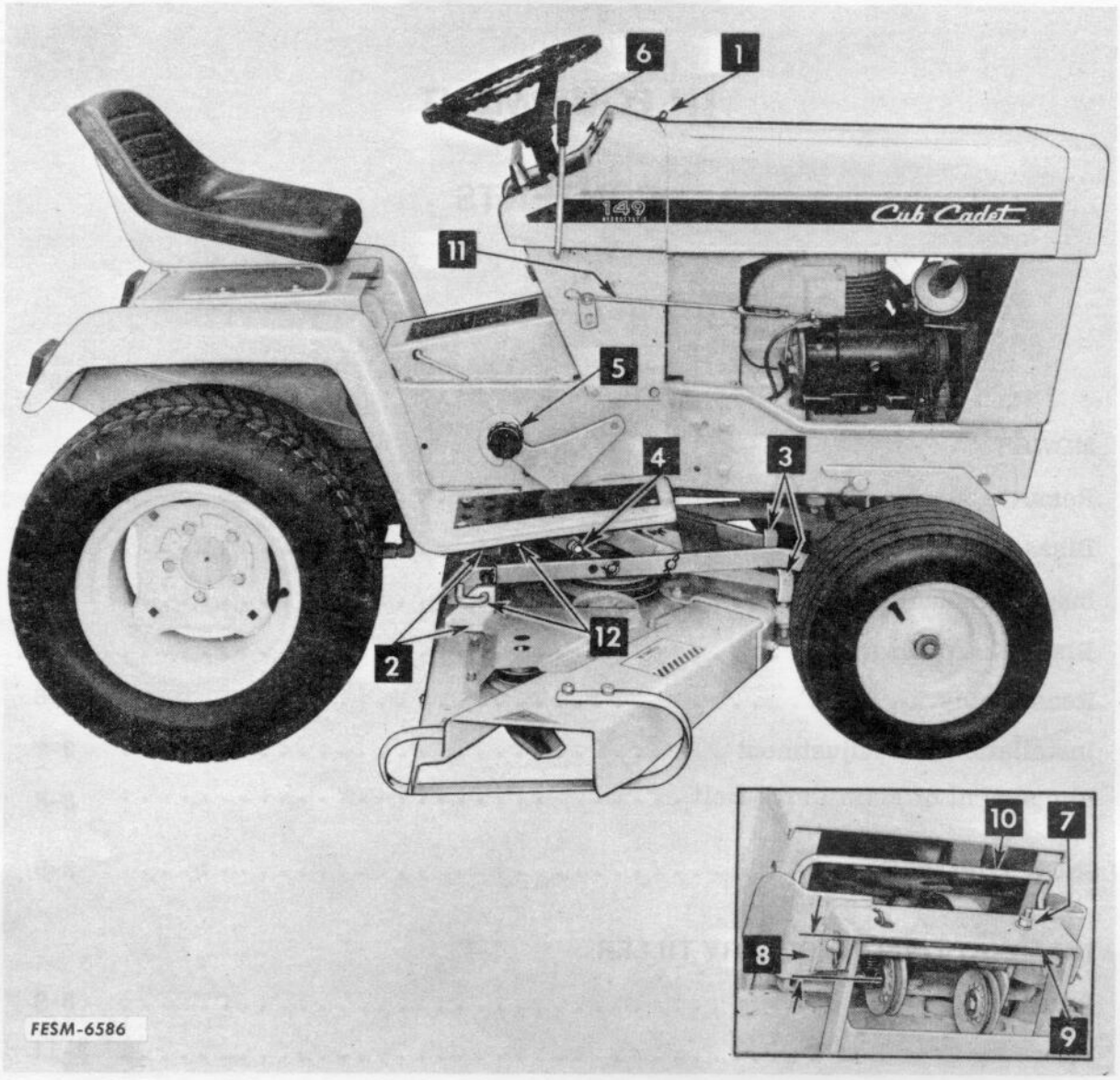

1. Front PTO clutch lever
2. Mower support brackets
3. Mower support clevises
4. Lift frame "Q-A" cotters
5. Lift stop
6. Hydraulic lift handle
7. V-belt tension bolt
8. Spring tension measurement
9. Front hanger cover
10. Quick hitch
11. Front PTO clutch rod
12. Support pins

MOWER

Removal

1. Lower the mower to the ground.

2. Pull the support pins to release mower from lift frame.

3. Slide the mower forward to free it from the lift support clevises. Pull the lift handle back to raise the lift frame.

4. Position front wheels to allow the mower to be removed.

To remove the lift frame detach the two "Q-A" cotters, one on each side, and push the tractor quick hitch latch assembly down.

Pull the hanger assembly forward to uncouple from tractor.

Disassembly

(Refer to Illust. 3-3)

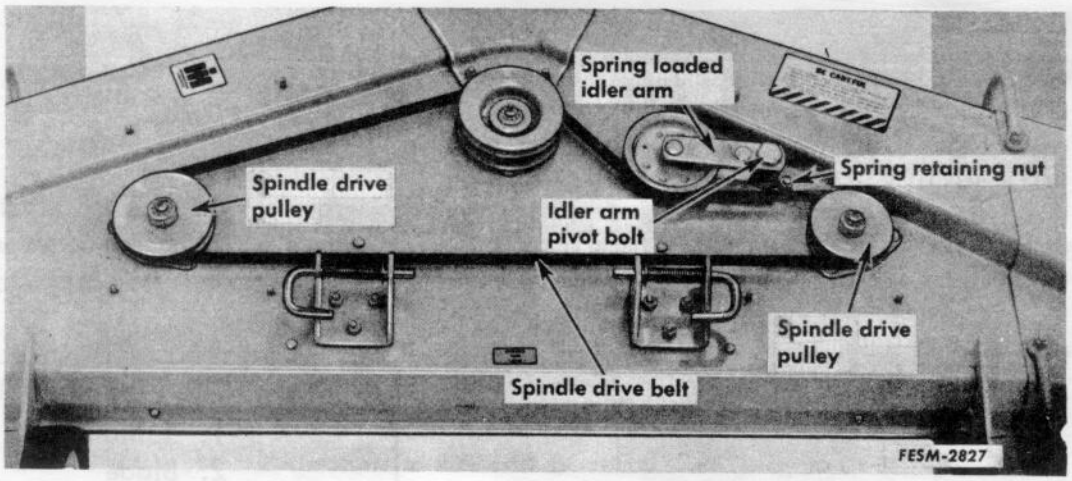

1. Remove the belt shields.

2. Remove the spindle drive belt.

3. To remove the idler arm assembly, remove the nut and washer securing the spring and the pivot bolt.

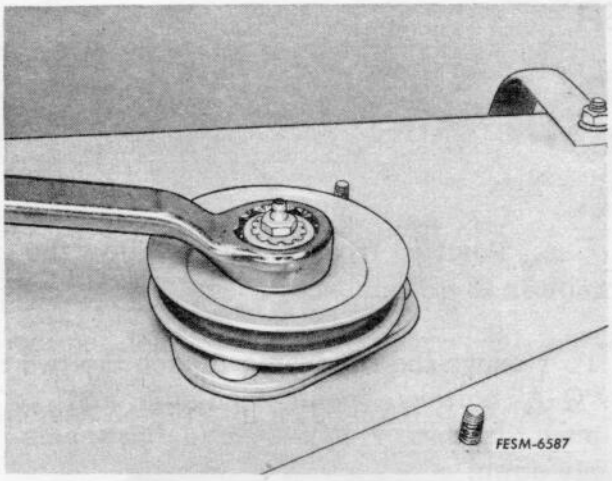

Outer spindle.

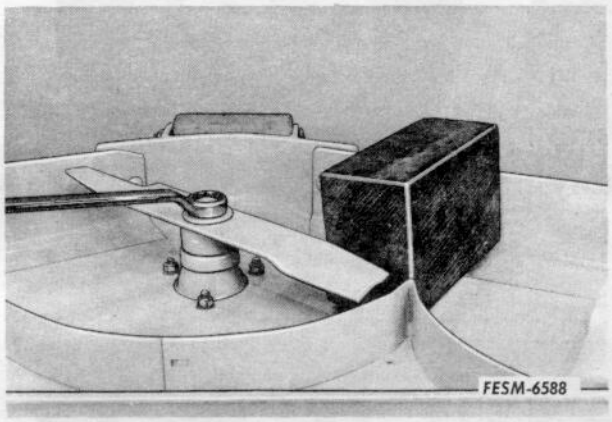

Center spindle.

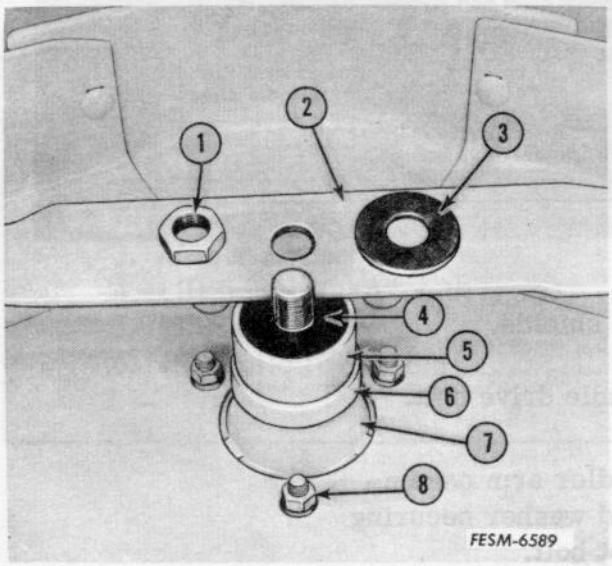

4. To remove a spindle assembly:

a. Secure the pulley or blade.

b. Remove the spindle nut, washer, blade, friction washer, spacer and spindle cup.

c. Remove the nuts holding the spindle housing and lift the assembly out.

1. Spindle nut
2. Blade
3. Washer
4. Friction washer
5. Spacer
6. Spindle cup
7. Spindle housing
8. Spindle housing nut

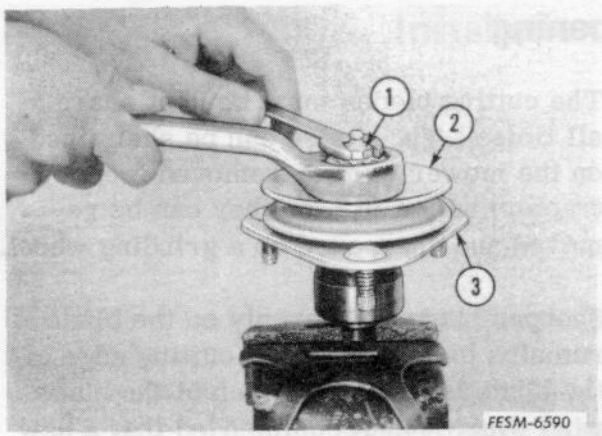

5. Clamp the spindle assembly in a vise equipped with brass jaws.

6. Secure the pulley and remove the end bolt.

NOTE: On late production mowers, a threaded spindle and hex nut replaced the spindle end bolt.

1. Spindle end bolt
2. Pulley
3. Spindle housing cap

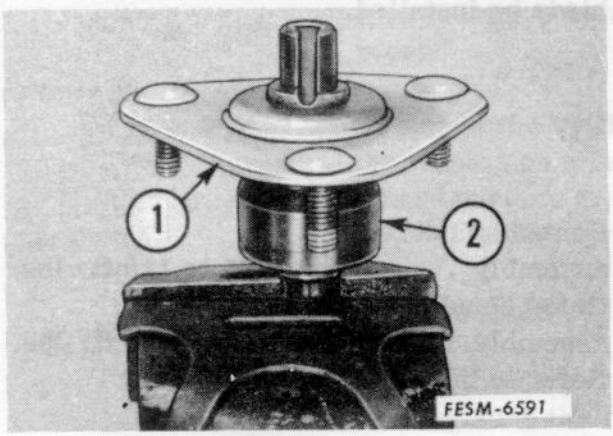

7. Lift off the pulley, key and spindle housing cap.

1. Spindle housing cap
2. Spindle bearing

Inspection and Repair

1. Inspect the spindle bearing for wear, roughness of operation or shaft damage. Replace if necessary.

2. Check the spindle housing for cracks, breaks or wear. Replace if necessary.

3. Inspect the sprindle friction discs for damage and replace if necessary.

4. Inspect the spindle drive belt for wear and replace if necessary.

5. Inspect the pulleys for wear and replace if necessary.

6. Inspect the shroud assembly for dents etc. and repair or replace if necessary.

7. Inspect the main drive belt for wear and replace if necessary.

8. Inspect the drive belt idler pulleys for freeness of rotation and replace if necessary.

9. Inspect the blades for excessive wear and nicks. Refer to "BLADE SHARPENING".

Blade Sharpening

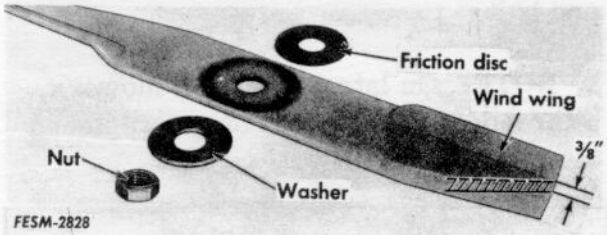

The cutting blades must be kept sharp at all times. The blades can be sharpened on the mower (mower removed from tractor) with a file, or they can be removed and sharpened on a grinding wheel.

Sharpen blade ends evenly so the blade remains balanced. If the cutting edge of the blade is within 3/8 inch of the blade wind wing, it is recommended that a new blade be installed.

Reassembly

1. Reassemble the mower by reversing the disassembly procedure.

2. If the mower has spindle end bolts used on early production mowers, torque the spindle end bolt to 38-45 ft. lbs.

NOTE: For late production mowers using a threaded spindle and hex nut, torque the hex nut as follows:

Center spindle assembly . . . . . 95 to 110 ft. lbs.
Outer spindle assembly . . . . . 55 to 70 ft. lbs.
Refer to the drawing below.

3. Torque the spindle end nut to 55 - 60 ft. lbs.

4. Lubricate the spindle bearings with IH 251 HEP or its equivalent.

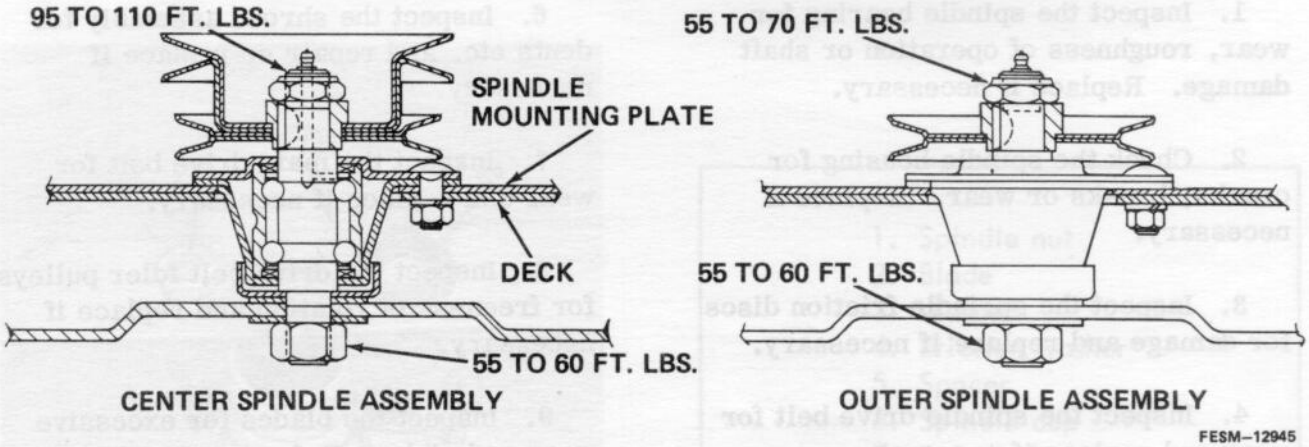

Installation

Install the mower by reversing the removal procedure.

Level Adjustment

Before adjusting mower on the tractor, check the tires for proper inflation before making a level and height adjustment.

To adjust the mower for level, first place the tractor on a level surface, preferably a hard surface area such as a garage floor or sidewalk.

Side to Side

Lower the mower almost to the ground making sure the runners do not touch the ground. Add 13/32 x 13/16 x .065 inch washers, as required, under the left or right mower support brackets so the height from the top of the mower housing to the ground is equal on each side. Then tighten support brackets securely.

Front to Rear

Push the tractor lift handle all the way forward to lower the mower to mowing height. Rotate the center and one outer blade so they are parallel and pointing straight to the front and rear. Then adjust the left and right support clevises so the front edge of the center blade is level with the back edge of the outer blade. Rotate blades 180° and recheck.

If mower leveling is difficult, check for bent blades.

Adjustment of Main Drive Belt

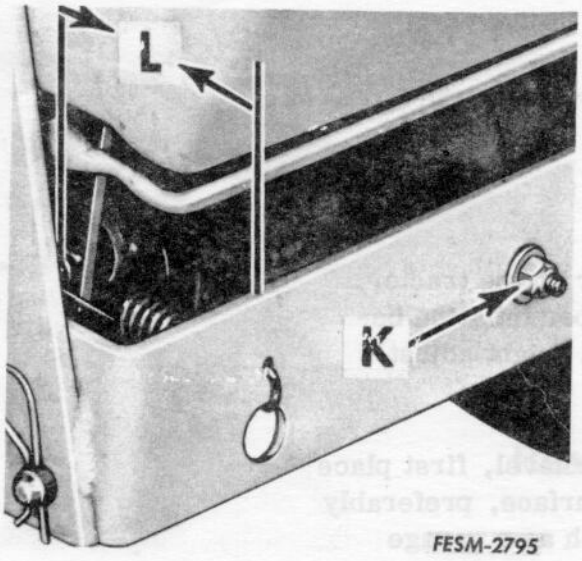

Main drive belt adjustment.

38", 42" and 48" Mower:

Adjust nut "K" to get 3-1/2" at "L". Maintain this adjustment for proper belt tension. "L" measurement is taken between center of pulley to inner surface of the front hanger.

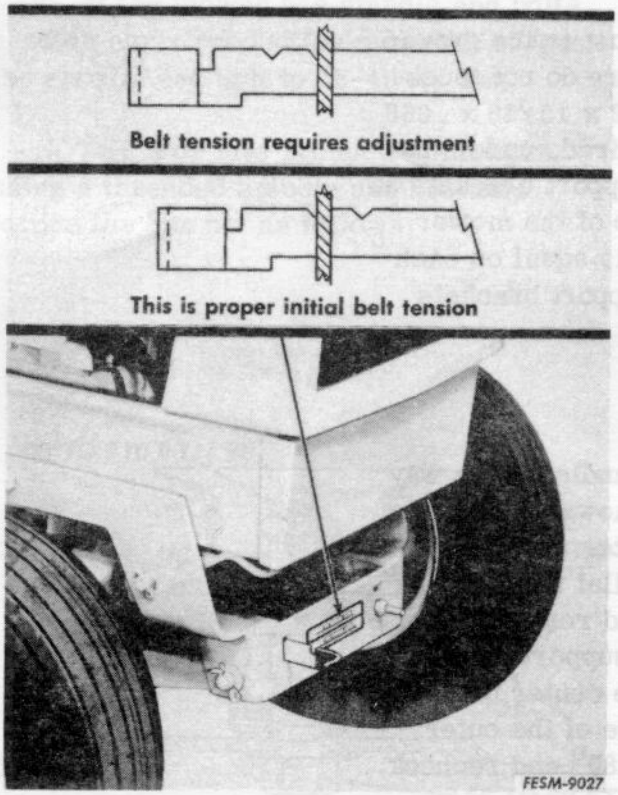

44" and 50" Mowers:

Adjust the V-belt tension bolt so the notch on the idler bracket is in line with the slot as shown.

Tiller 1A-U1111

SNOW THROWER

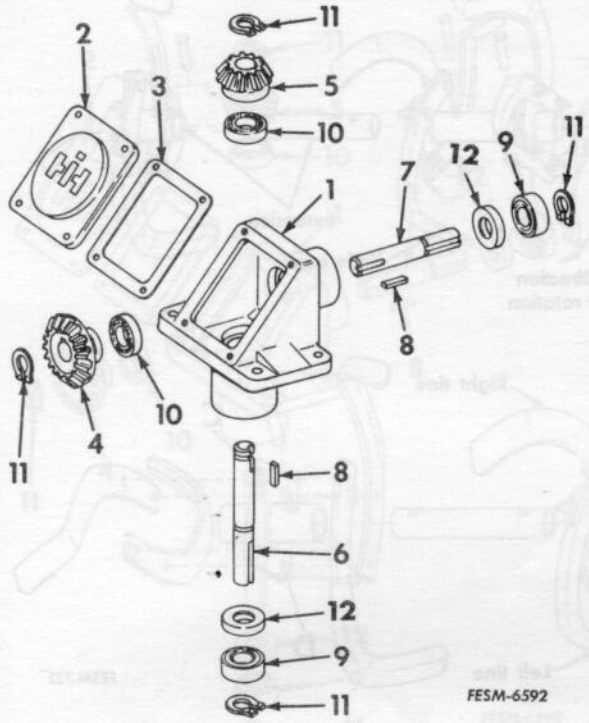

The gear box for the snow thrower is the only assembly that requires servicing information. The four bearings are bottomed against shoulders in the gear box. The bearings at the outer ends of the shaft are retained in the gear box with snap rings. The bevel and pinion gears are keyed to their shafts and held in position with snap rings. There is no shimming of the gears for backlash as this is predetermined by the manufacturer. Refer to the Operator's Manual for the correct fill level and lubricant.

1. Case	5. Bevel gear	9. Bearing
2. Cover	6. Input shaft	10. Bearing
3. Gasket	7. Output shaft	11. Snap ring
4. Bevel gear	8. Key	12. Not used

INTERNATIONAL® 1A ROTARY TILLER

Replacing Tines

The tines are marked and identified as "lefts" and "rights". They must be reinstalled in the same identical position as they were before removal so the knife edge will always lead in the direction of rotation.

When the tines are properly assembled on the shaft, the knife edges of the tines create a clockwise spiral effect around the shaft when viewed from the right side of the machine.

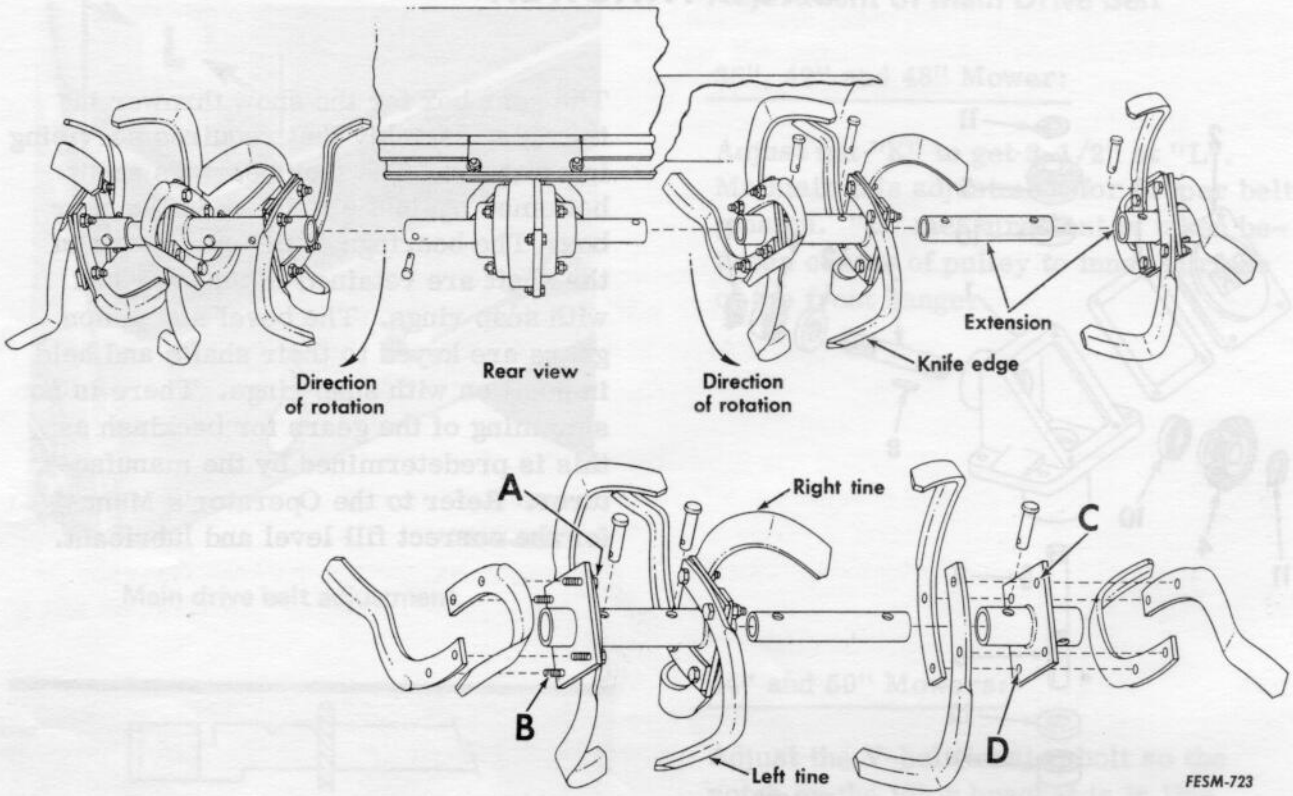

Rear view showing proper tine assembly for correct timing.

The left and right tines are always positioned 90 degrees from each other and bolted on opposite sides on the mounting plate.

Attach the right tines to the right side and the left tines to the left side of the mounting plate when viewed from the rear of the machine.

The tine shaft having two mounting plates has one plate with bolt holes "A" and "B" in line with the shaft pin hole.

Position the shaft with this particular plate toward the left. Then, locate the end hole of a right tine at hole "A" and the end hole of the other right tine at hole "B" on the right side of the mounting plate. Locate the inner hole of a left tine at hole "A" and the inner hole of the other left tine at hole "B" on the left side of the mounting plate. Complete the tine shaft assembly as shown. The completed assembly is the same for each side of the tiller; make sure the knife edges (cutting edges) lead in the direction of rotation.

Position the extension mounting plate so the shaft pin hole that lines up with bolt holes "C" and "D" is toward the left. Then locate the end hole of a left tine at hole "C" and the end hole of the other left tine at hole "D" on the left side of the mounting plate. Locate the inner hole of a right tine at hole "C" and the inner hole of the other right tine at hole "D" on the right side of the mounting plate. Complete the assembly as shown. The completed extension assembly is the same for each side of the tiller; make sure the knife edges lead in the direction of rotation.

Servicing Gear Box

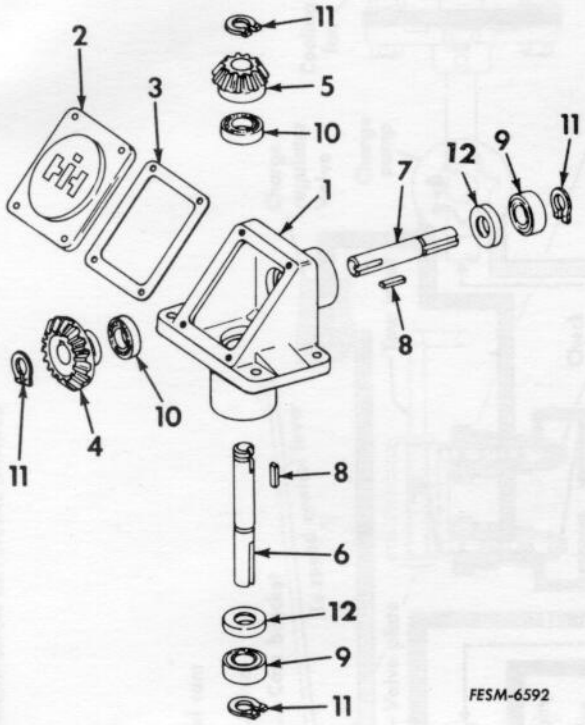

The gear box for the rotary tiller is the only assembly that requires servicing information. The four bearings are bottomed against shoulders in the gear box. The bearings at the outer ends of the shaft are retained in the gear box with snap rings. The bevel gears are keyed to their shafts and held in position with snap rings. There is no shimming of the gears for backlash as this is predetermined in manufacturing. Always replace the oil seals when the gear box is disassembled. Refer to the Operator's Manual for the correct fill level and lubricant.

1. Case	5. Bevel gear	9. Bearing
2. Cover	6. Input shaft	10. Bearing
3. Gasket	7. Output shaft	11. Snap ring
4. Bevel gear	8. Key	12. Seal

HYDROSTATIC TRANSMISSION EXTERNAL BRAKES

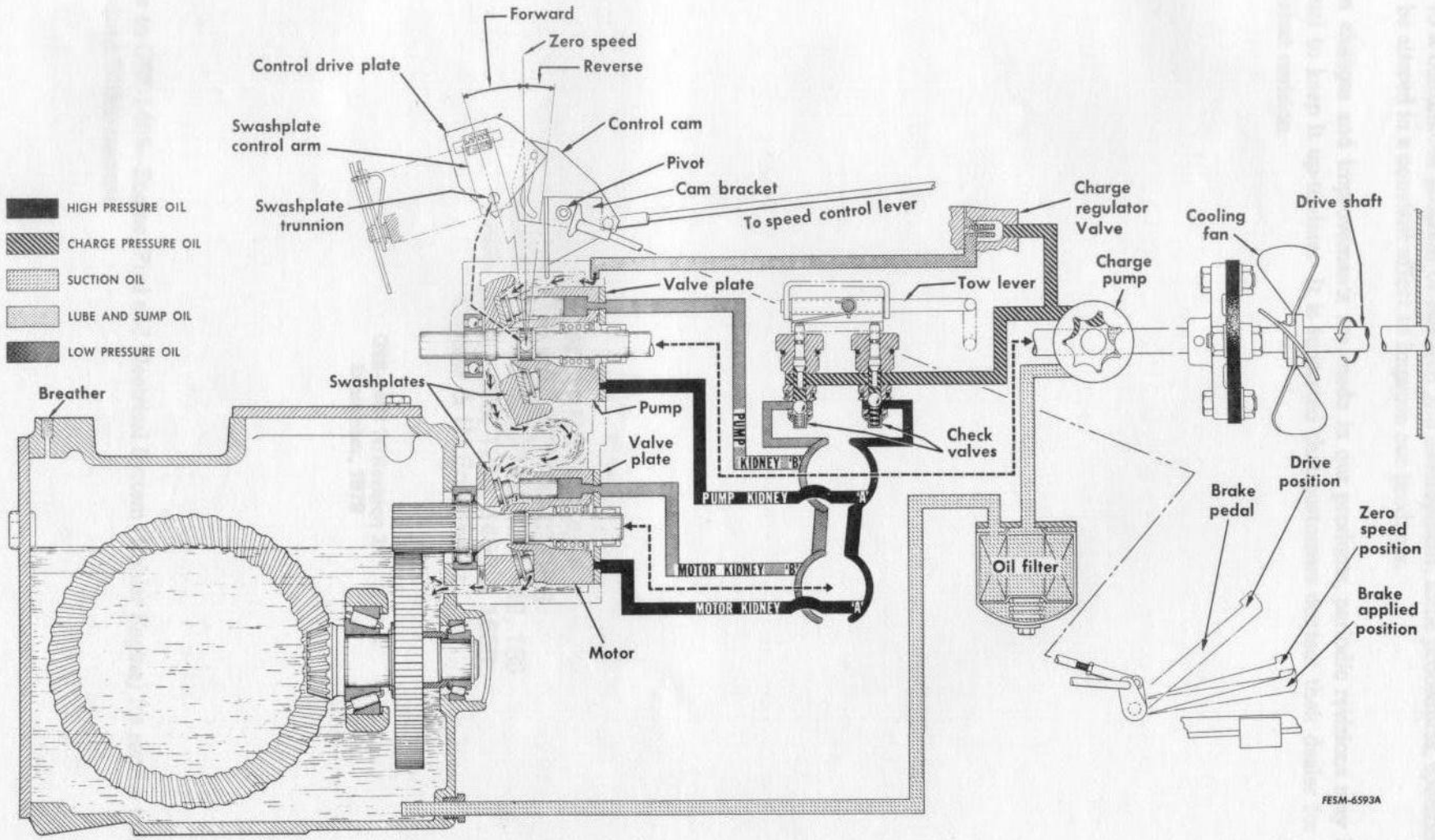

(c) Avoid fires — be sure container or funnel does not touch the battery. Do not overfill the fuel tank. Wipe up spilled gasoline.

(d) Replace fuel tank cap securely.

9. Never use trouble lights or electric powered tools that have cut and/or damaged cords or plugs. Be sure all electric tools are properly grounded.

10. Never run an engine in a confined area such as a garage or storage building any longer than is necessary for immediate moving of the machine out of or into the area. EXHAUST GASES ARE TOXIC. OPENING DOORS AND WINDOWS MAY NOT PROVIDE ADEQUATE VENTILATION.

11. After servicing, be sure all tools, parts, or servicing equipment are removed from the machine.

12. Electrical storage batteries give off highly inflammable hydrogen gas when charging and continue to do so for some time after receiving a steady charge. Do not under any circumstances allow an electric spark or an open flame near the battery. Always disconnect a battery cable before working on the electrical system.

13. Hydraulic fluid escaping under pressure can have enough force to penetrate the skin. Hydraulic fluid may also infect a minor cut or opening in the skin. If injured by escaping fluid, see a doctor at once. Serious infection or reaction can result if medical treatment is not given immediately.

Do not attempt to repair or tighten hoses that are under pressure, when the boom is raised, or with the tractor engine running. Cycle all hydraulic control valves to relieve all pressure before disconnecting the lines or performing other work on the hydraulic system. Make sure all connections are tight and hoses and lines are in good condition before applying pressure to the system. To locate a leak under pressure, use a small piece of cardboard or wood. Never use hands.

14. When using an acetylene torch always wear welding goggles and gloves. Keep a "charged" fire extinguisher within reach. Do not weld or heat areas near fuel tanks or fuel lines and utilize proper shielding around hydraulic lines.

15. Always use safety stands in conjunction with hydraulic jacks or hoists. Do not rely on the jack or hoist to carry the load, they could fail. Always use a safety bar to block hydraulic cylinders.

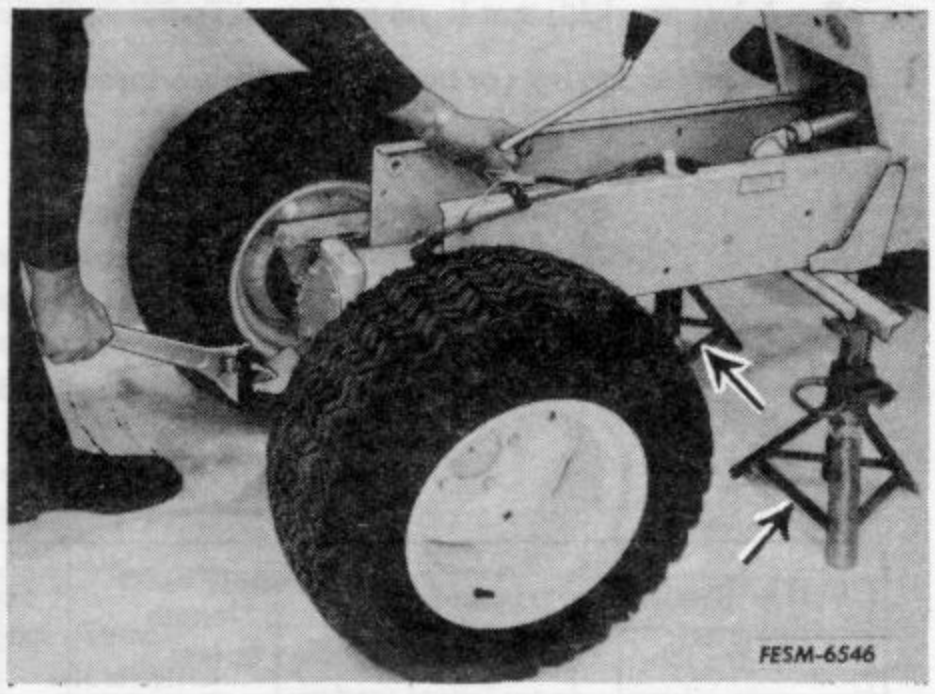

16. When splitting tractors, or disassembling machines, be sure to use safety stands and adequate supports to prevent tipping or rollover.

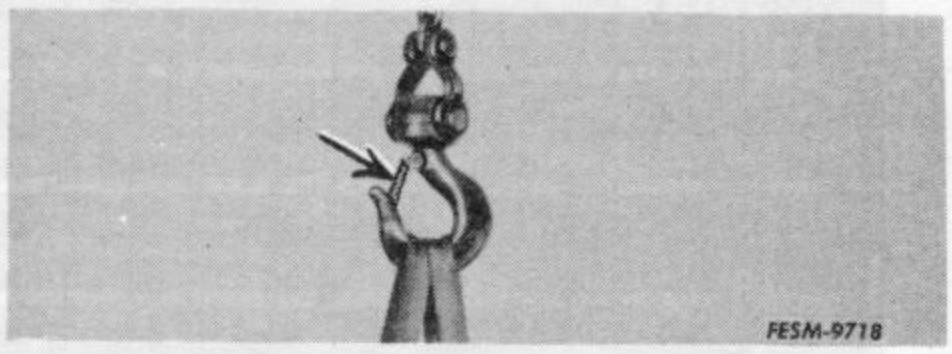

17. Use a safety catch on all hoist hooks. Do not take a chance, the load could slip off of the hook.

18. Use pullers to remove bearings, bushings, gears, cylinder sleeves, etc. when applicable. Use hammers, punches and chisels only when absolutely necessary. Then, be sure to wear safety glasses.

19. Be careful when using compressed air to dry parts. Use approved air blow guns, do not exceed 30 psi, wear safety glasses or goggles and use proper shielding to protect everyone in the work area.

IMPORTANT: The above is only a partial list of safe work rules. In addition, always refer to the Operator's Manual for the specific machine for additional safe work rules regarding the machine operation.

Peter Egan
272-5551
Kevin

INTERNATIONAL HARVESTER

Printed in United States of America

STANDARD TORQUE DATA FOR NUTS AND BOLTS— FOOT POUNDS

Recommended torque for all Standard Application Nuts and Bolts, provided:

A. All thread surfaces are clean and lubricated with SAE-30 engine oil. (See NOTE.)

B. Joints are rigid, that is, no gaskets or compressible materials are used.

C. When reusing nuts or bolts use minimum torque values.

NOTE: Multiply the standard torque by:

- **.65 when finished jam nuts are used.**
- **.70 when Molykote, white lead or similar mixtures are used as lubricants.**
- **.75 when parkerized bolts or nuts are used.**
- **.85 when cadmium plated bolts or nuts and zinc bolts w/waxed zinc nuts are used.**
- **.90 when hardened surfaces are used under the nut or bolt head.**

1 FOOT POUND = 1.355 NEWTON METERS

Bolt or Stud Diameter		Type 1 Studs Only		Type 1 Bolts 6" length or less		Type 1 Bolts longer than 6"		Type 5 (all lengths)		Type 8 (all lengths) Only when used† in cast (gray) iron		Type 8 (all lengths) All other applications	
Inches	MM	Min.	Max.	Min.	Max.	Min.	Max.	Min.	Max.	Min.	Max.	Min.	Max.
1/4	6.4	5	6	5	6	3	3	9	10	11	13	12	14
5/16	8.0	12	13	12	13	6	7	19	21	24	27	27	30
3/8	9.5	21	24	21	24	11	13	33	37	43	47	45	50
7/16	11.1	35	38	35	38	19	21	53	60	69	76	75	85
1/2	12.7	52	58	52	58	29	32	80	90	104	117	115	130
9/16	14.3	70	80	70	80	41	46	115	130	150	170	165	185
5/8	15.9	98	110	98	110	57	63	160	180	210	230	220	250
3/4	19.0	174	195	174	195	100	112	290	320	350	390	400	450
7/8	22.2	300	330	162	181	162	181	420	470	570	630	650	730
1	25.4	420	470	250	270	250	270	630	710	850	950	970	1090
1-1/8	28.6	600	660	350	380	350	380	850	950	1200	1350	1380	1550
1-1/4	31.8	840	940	490	540	490	540	1200	1350	1700	1900	1940	2180
1-3/8	34.9	1100	1230	640	710	640	710	1570	1760	2300	2500	2600	2800
1-1/2	38.1	1470	1640	850	940	850	940	2000	2300	3000	3300	3300	3700
1-3/4	44.5	2350	2450	1330	1490	1330	1490	3300	3700	4700	5200	5300	6000
2	50.8	3500	3900	2000	2200	2000	2200	5000	5500	7000	7800	8000	9000

†When bolt penetration is 1-1/2 times the diameter of the bolt.

BOLT TYPE IDENTIFICATION CHART

IH TYPE	S.A.E. GRADE	DESCRIPTION	BOLT HEAD MARKING *
1	Equivalent 1 or 2	WILL HAVE A WP STANDARD MONOGRAM IN THE CENTER OF THE HEAD Low or Medium Carbon Steel Not Heat Treated	
5	5	WILL HAVE A WP AND 3 RADIAL LINES Quenched and Tempered Medium Carbon Steel	
8	8	WILL HAVE A WP AND 6 RADIAL LINES Quenched and Tempered Special Carbon or Alloy Steel	

***The center marking identifies the bolt manufacturer. The WP monogram is currently used. Some bolts may still have an IH or a raised dot which previously identified IH bolts.**

STANDARD TORQUE DATA FOR NUTS AND BOLTS— NEWTON METERS

Recommended torque for all Standard Application Nuts and Bolts, provided:

A. All thread surfaces are clean and lubricated with SAE-30 engine oil. (See NOTE.)

B. Joints are rigid, that is, no gaskets or compressible materials are used.

C. When reusing nuts or bolts use minimum torque values.

NOTE: Multiply the standard torque by:

- **.65 when finished jam nuts are used.**
- **.70 when Molykote, white lead or similar mixtures are used as lubricants.**
- **.75 when parkerized bolts or nuts are used.**
- **.85 when cadmium plated bolts or nuts and zinc bolts w/waxed zinc nuts are used.**
- **.90 when hardened surfaces are used under the nut or bolt head.**

1 NEWTON METER = 0.738 FOOT POUND

Bolt or Stud Diameter		Type 1 Studs Only		Type 1 Bolts 6" length or less		Type 1 Bolts longer than 6"		Type 5 (all lengths)		Type 8 (all lengths)			
										Only when used† in cast (gray) iron		All other applications	
Inches	MM	Min.	Max.	Min.	Max.	Min.	Max.	Min.	Max.	Min.	Max.	Min.	Max.
1/4	6.4	7	8	7	8	4	4	12	14	15	18	16	19
5/16	8.0	17	18	17	18	8	10	26	29	33	37	37	41
3/8	9.5	29	33	29	33	15	18	45	50	58	64	61	68
7/16	11.1	48	52	48	52	26	29	72	81	94	103	102	115
1/2	12.7	71	79	71	79	39	43	108	122	141	159	156	176
9/16	14.3	95	108	95	108	56	62	156	176	205	230	225	250
5/8	15.9	133	149	133	133	77	85	220	245	285	310	300	340
3/4	19.0	240	265	240	265	136	152	390	430	470	530	540	610
7/8	22.0	400	450	220	245	220	245	570	640	770	850	880	990
1	25.4	570	640	340	365	340	365	850	960	1150	1290	1300	1480
1-1/8	28.6	810	900	470	510	470	510	1150	1290	1630	1830	1870	2100
1-1/4	31.8	1140	1270	660	730	660	730	1600	1830	2300	2600	2600	3000
1-3/8	34.9	1490	1670	870	960	870	960	2100	2400	3100	3400	3500	3800
1-1/2	38.1	2000	2200	1150	1270	1150	1270	2700	3100	4100	4500	4500	5000
1-3/4	44.5	3200	3300	1800	2000	1800	2000	4500	5000	6400	7000	7100	8100
2	50.8	4750	5300	2700	3000	2700	3000	6800	7500	9500	10500	10800	12200

†When bolt penetration is 1-1/2 times the diameter of the bolt.

BOLT TYPE IDENTIFICATION CHART

IH TYPE	S.A.E. GRADE	DESCRIPTION	BOLT HEAD MARKING *
1	Equivalent 1 or 2	WILL HAVE A WP STANDARD MONOGRAM IN THE CENTER OF THE HEAD Low or Medium Carbon Steel Not Heat Treated	
5	5	WILL HAVE A WP AND 3 RADIAL LINES Quenched and Tempered Medium Carbon Steel	
8	8	WILL HAVE A WP AND 6 RADIAL LINES Quenched and Tempered Special Carbon or Alloy Steel	

***The center marking identifies the bolt manufacturer. The WP monogram is currently used. Some bolts may still have an IH or a raised dot which previously identified IH bolts.**

CONVERSION TABLE
—inches to millimeters—

Inches	Millimeters	Inches	Millimeters	Inches	Millimeters	Inches	Millimeters
1	25.4	26	660.4	51	1295.4	76	1930.4
2	50.8	27	685.8	52	1320.8	77	1955.8
3	76.2	28	711.2	53	1346.2	78	1981.2
4	101.6	29	736.6	54	1371.6	79	2006.6
5	127.0	30	762.0	55	1397.0	80	2032.0
6	152.4	31	787.4	56	1422.4	81	2057.4
7	177.8	32	812.8	57	1447.8	82	2082.8
8	203.2	33	838.2	58	1473.2	83	2108.2
9	228.6	34	863.6	59	1498.6	84	2133.6
10	254.0	35	889.0	60	1524.0	85	2159.0
11	279.4	36	914.4	61	1549.4	86	2184.4
12	304.8	37	939.8	62	1574.8	87	2209.8
13	330.2	38	965.2	63	1600.2	88	2235.2
14	355.6	39	990.6	64	1625.6	89	2260.6
15	381.0	40	1016.0	65	1651.0	90	2286.0
16	406.4	41	1041.4	66	1676.4	91	2311.4
17	431.8	42	1066.8	67	1701.8	92	2336.8
18	457.2	43	1092.2	68	1727.2	93	2362.2
19	482.6	44	1117.6	69	1752.6	94	2387.6
20	508.0	45	1143.0	70	1778.0	95	2413.0
21	533.4	46	1168.4	71	1803.4	96	2438.4
22	558.8	47	1193.8	72	1828.8	97	2463.8
23	584.2	48	1219.2	73	1854.2	98	2489.2
24	609.6	49	1244.6	74	1879.6	99	2514.6
25	635.0	50	1270.0	75	1905.0	100	2540.0

1 inch = 25.4 millimeters

To convert inches to millimeters, the inch value to be converted should be written down, carried to as many decimal places as the desired accuracy requires. It should then be split into groups of not more than two figures each. The equivalent of each group should then be taken from the table, proper regard being given to the position of the decimal point in each case, and the equivalent of the inch value given.

For example, to convert 2.4635 inches to millimeters:

2.0000 inches = 50.80000 millimeters
.4600 inches = 11.68400
.0035 inches = .08890
2.4635 inches = 62.57290 millimeters
Correct to 3 decimal places.
2.4635 inches = 62.573 millimeters

CONVERSION TABLE
—millimeters to inches—

Millimeters	Inches	Millimeters	Inches	Millimeters	Inches	Millimeters	Inches
1	0.03937008	26	1.0236220	51	2.0078740	76	2.9921260
2	0.07874016	27	1.0629921	52	2.0472441	77	3.0314961
3	.11811024	28	1.1023622	53	2.0866142	78	3.0708661
4	.15748031	29	1.1417323	54	2.1259842	79	3.1102362
5	.19685039	30	1.1811024	55	2.1653543	80	3.1496063
6	.23622047	31	1.2204724	56	2.2047244	81	3.1889764
7	.27559055	32	1.2598425	57	2.2440945	82	3.2283465
8	.31496063	33	1.2992126	58	2.2834646	83	3.2677165
9	.35433071	34	1.3385827	59	2.3228346	84	3.3070866
10	.3937008	35	1.3779528	60	2.3622047	85	3.3464567
11	.4330709	36	1.4173228	61	2.4015748	86	3.3858268
12	.4724409	37	1.4566929	62	2.4409449	87	3.4251968
13	.5118110	38	1.4960630	63	2.4803150	88	3.4645669
14	.5511811	39	1.5354331	64	2.5196850	89	3.5039370
15	.5905512	40	1.5748031	65	2.5590551	90	3.5433071
16	.6299213	41	1.6141732	66	2.5984252	91	3.5826772
17	.6692913	42	1.6535433	67	2.6377953	92	3.6220472
18	.7086614	43	1.6929134	68	2.6771654	93	3.6614173
19	.7480315	44	1.7322835	69	2.7165354	94	3.7007874
20	.7874016	45	1.7716535	70	2.7559055	95	3.7401575
21	.8267717	46	1.8110236	71	2.7952756	96	3.7795276
22	.8661417	47	1.8503937	72	2.8346457	97	3.8188976
23	.9055118	48	1.8897638	73	2.8740157	98	3.8582677
24	.9448819	49	1.9291339	74	2.9133858	99	3.8976378
25	.9842520	50	1.9685039	75	2.9527559	100	3.937008

1 mm = .03937008 inches

To convert millimeters to inches the millimeter value to be converted should be written down, carried to as many decimal places as the desired accuracy requires. It should then be split up into groups of not more than two figures each. The equivalent of each group should then be taken from the table, proper regard being given to the position of the decimal point in each case, and the equivalent of the several groups found by addition. This sum will be the inch equivalent of the millimeter value given.

For example to convert 75.384 millimeters to inches:

75.000 millimeters = 2.9527559 inches
.380 millimeters = .0149606
.004 millimeters = .0001574

75.384 millimeters = 2.9678739 inches
Correct to 5 decimal places.
75.384 millimeters = 2.96787 inches

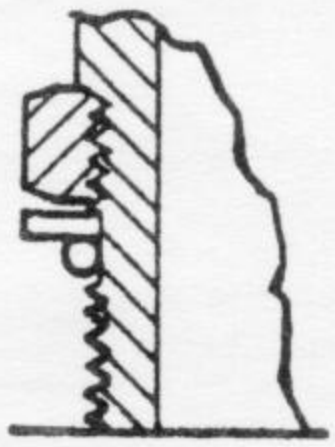

FESM-9511

1. Lubricate the O-ring seal with a light coat of oil or petroleum jelly and install it into the groove of the fitting next to the metal back-up washer.

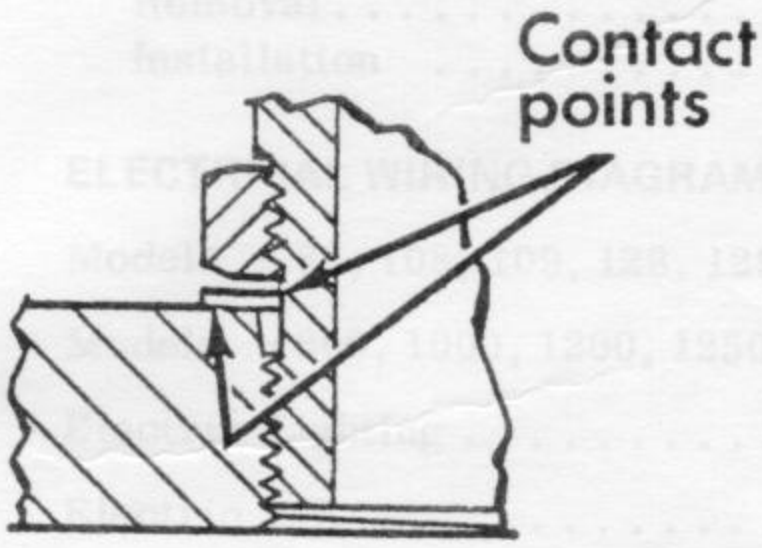

FESM-9512

2. Install the fitting until the metal back-up washer contacts the face of the boss. This locates the maximum depth of the fitting.

CAUTION: Do not overtighten and distort the metal back-up washer.

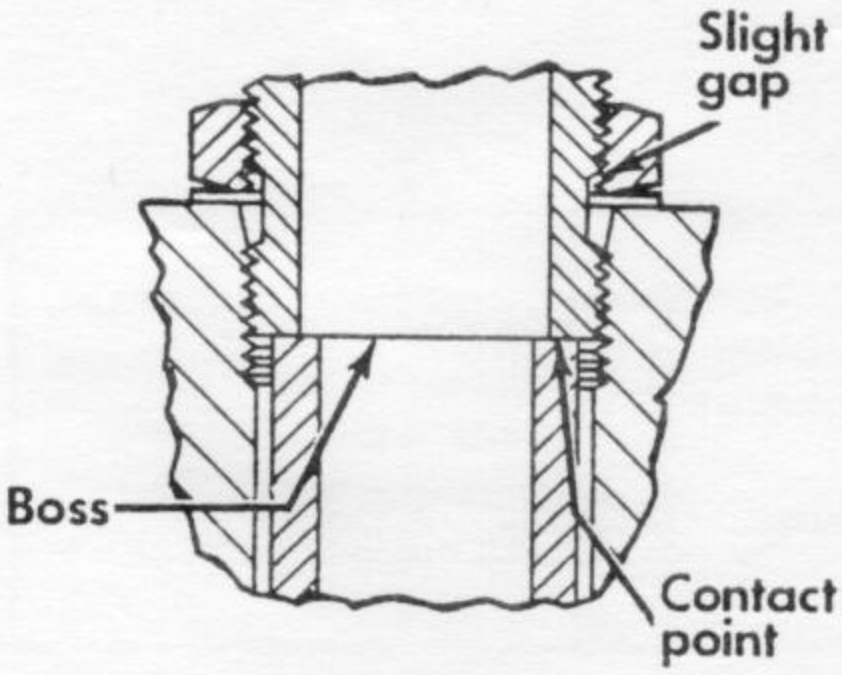

FESM-9513

3. Position the fitting by turning it out (counterclockwise) to a maximum of one complete turn and tighten the locknut to the recommended torque.

NOTE: In special applications where this fitting is used the fitting will contact the internal part of the straight threaded boss prior to the back-up washer.